HYDRAULIKTÄTNINGAR

Hydraulic Sealing Systems

HYDRAULISK CYLINDER SCHEMA A

Hydraulic cylinder sketch A

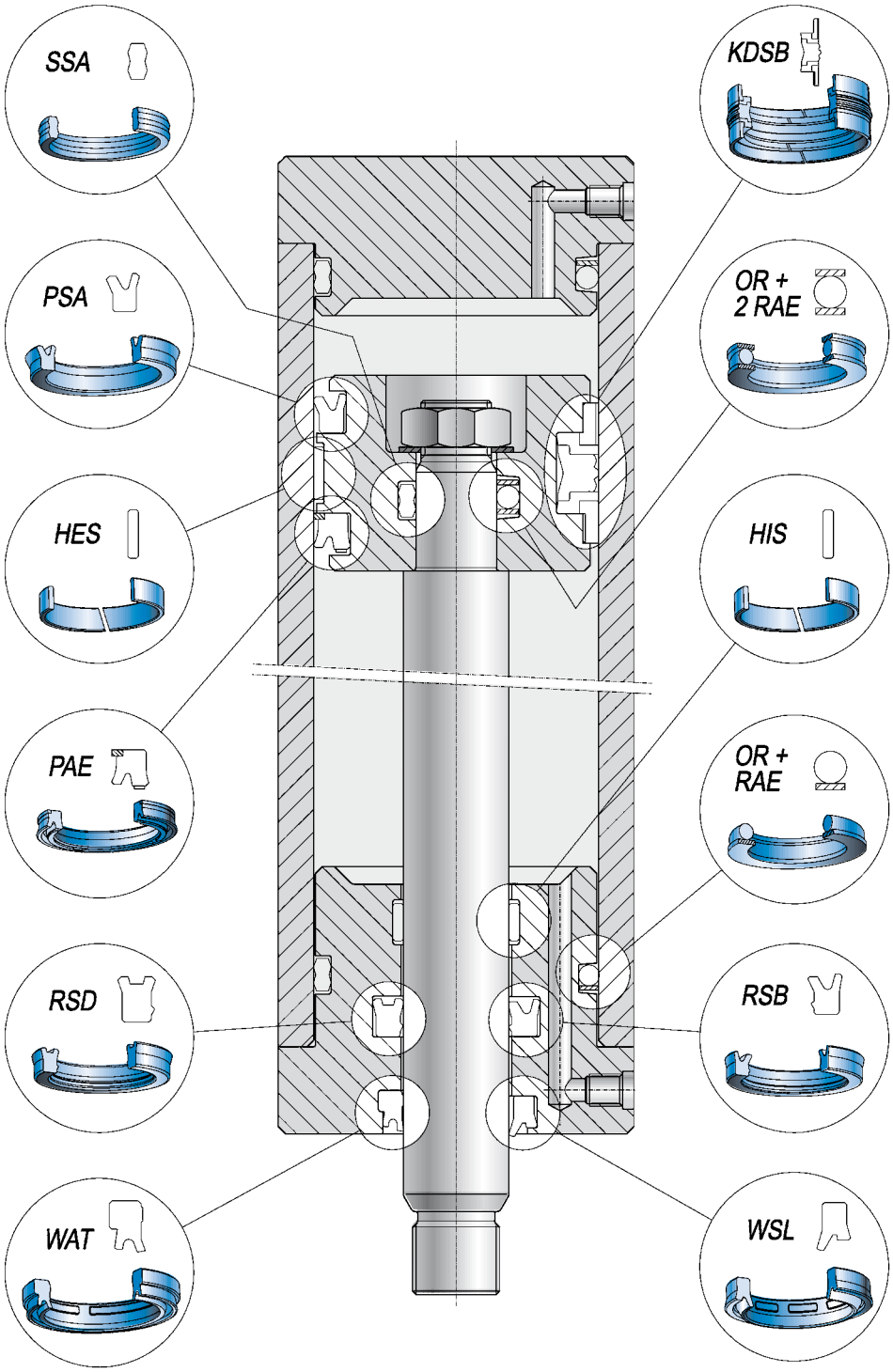

HYDRAULISK CYLINDER SCHEMA B

Hydraulic cylinder sketch B

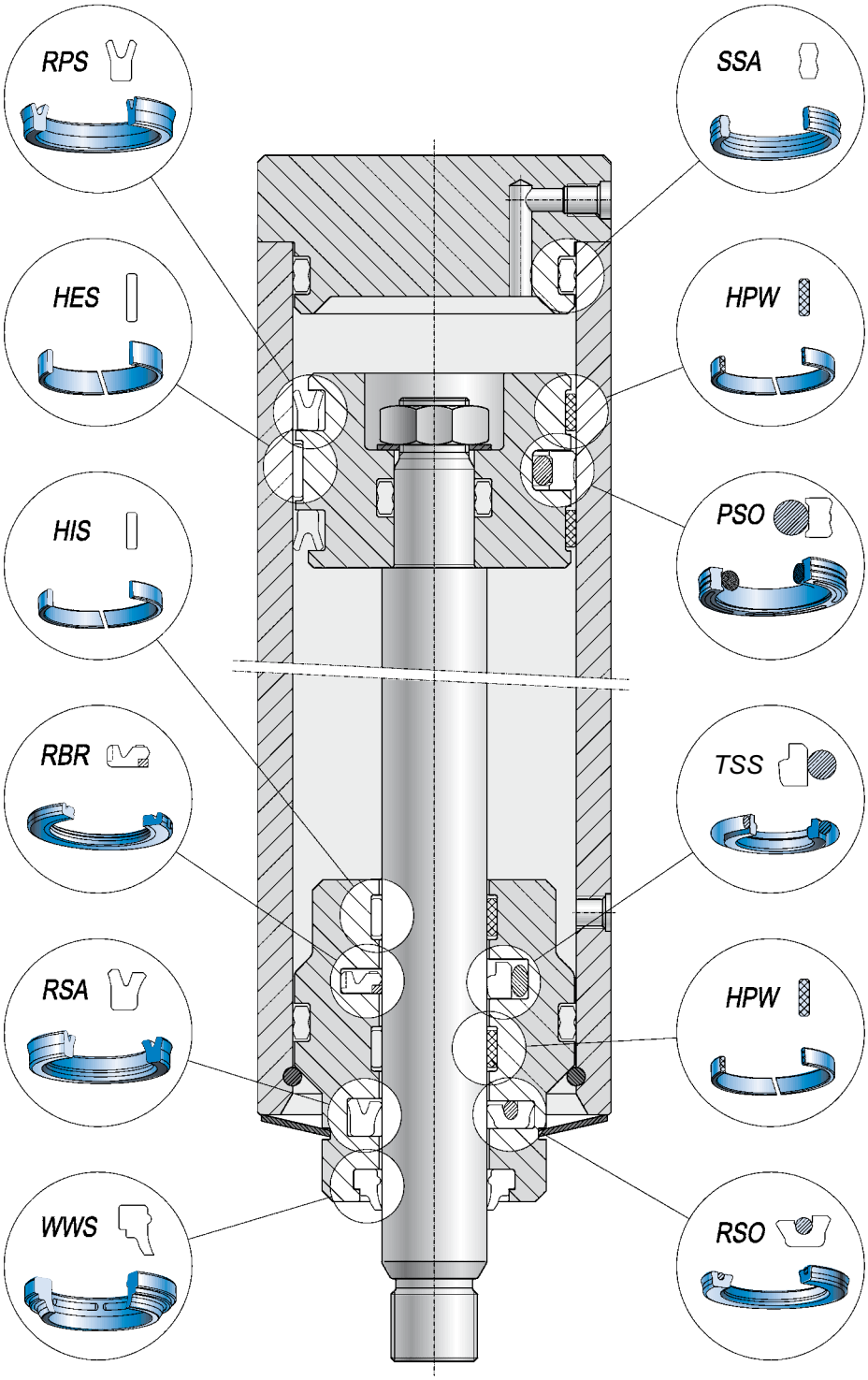

HYDRAULISK CYLINDER SCHEMA C

Hydraulic cylinder sketch C

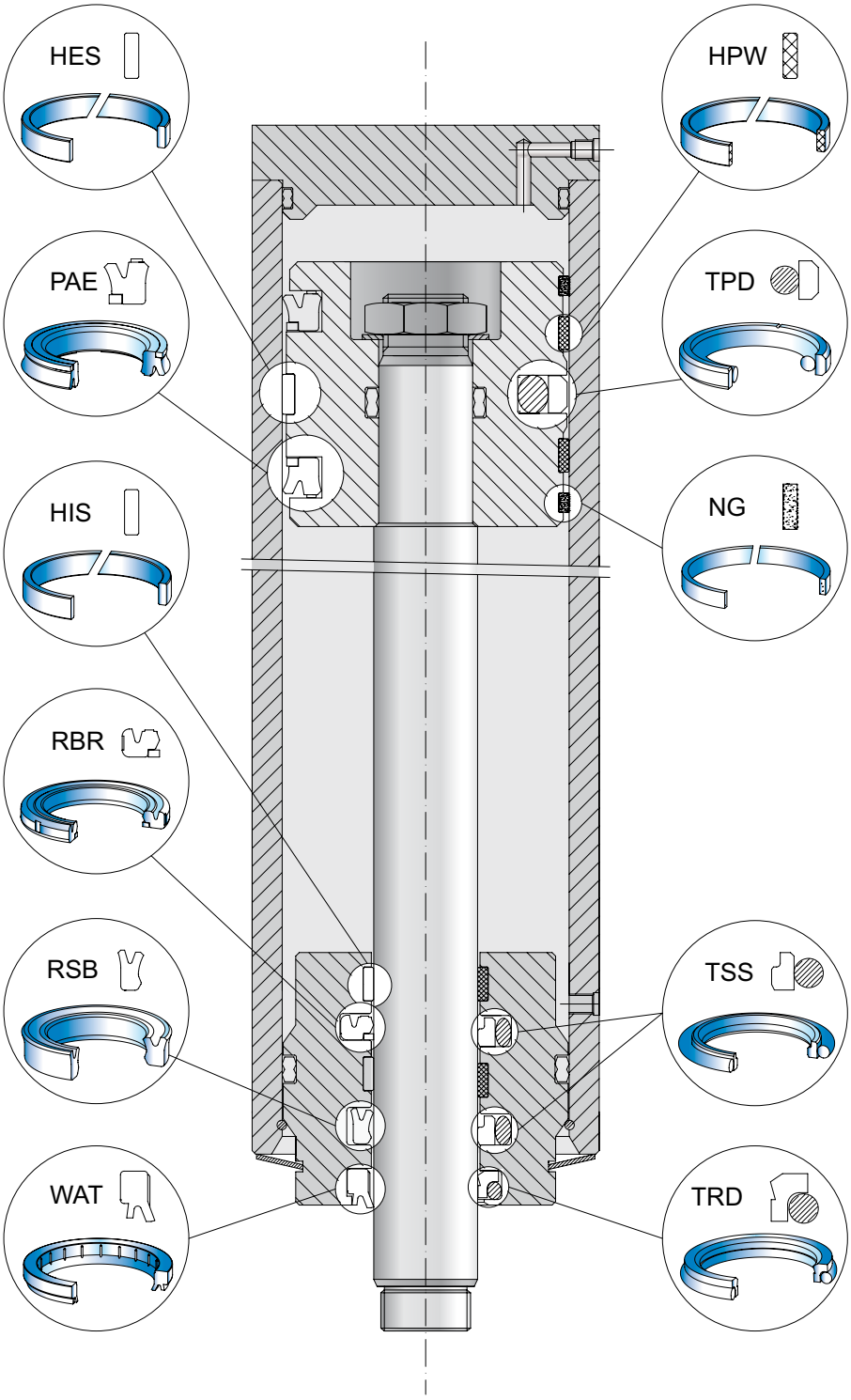

PROFILER
Profiles

KOLVSTÅNGSTÄTNINGAR / *ROD SEALS*

Gränsvärden (ej kombinerade) / *Maximum conditions (not combined)*

Profil *Profile*	Vår ref. *Our Ref.*	Temperatur *Temperature* C°	Tryck *Pressure* Bar	Hastighet *Speed* m/s	Material *Material*	*TPU*	*POM*	*PTFE Bronze*	*NBR*	*TPE*	*Resin*	*PTFE Carbon*	*PTFE*	Sektion *Section*	Sida *Page*
	RSA	-35 +100	<400	<05	TPU	●								Hydraulik *Hydraulic*	**28**
	RSB	-35 +100	<400	<0,5	TPU	●								Hydraulik *Hydraulic*	**32**
	RSB2	-35 +100	<500	<0,5	TPU POM	●	○							Hydraulik *Hydraulic*	**36**
	RSC	-35 +100	<400	<0,5	TPU	●								Hydraulik *Hydraulic*	**38**
	RSD	-35 +100	<400	<0,5	TPU	●								Hydraulik *Hydraulic*	**42**
	TSS	-30 +120	<600	15	PTFE brons/bronze NBR			●	●					Hydraulik *Hydraulic*	**46**
	RSO	-35 +100	<400	<0,5	TPU NBR	●			●					Hydraulik *Hydraulic*	**48**
	RBR	-35 +100	<400	<0,8	TPU POM	●	○							Hydraulik *Hydraulic*	**50**
	RPS	-35 +100	<400	<0,5	TPU	●								Hydraulik *Hydraulic*	**52**

PROFILER
Profiles

KOLVTÄTNINGAR / *PISTON SEALS* Gränsvärden (ej kombinerade) / *Maximum conditions (not combined)*														
Profil *Profile*	Vår ref. *Our Ref.*	Temperatur *Temperature* °C	Tryck *Pressure* Bar	Hastighet *Speed* m/s	Material *Material*	*TPU*	*POM*	*PTFE Bronze*	*NBR*	*TPE*	*Resin*	*PTFE Carbon*	*PTFE*	Sektion *Section*	Sida *Page*
	RPS	-35 +100	<400	<0,5	TPU	●								Hydraulik *Hydraulic*	**52**
	PSA	-35 +100	<400	<0,5	TPU	●								Hydraulik *Hydraulic*	**58**
	PAE	-35 +100	<500	<0,5	TPU POM	●	○							Hydraulik *Hydraulic*	**62**
	PSH+RR	-35 +100	<400	<0,5	TPU POM	●	○							Hydraulik *Hydraulic*	**64**
	PSO	-30 +100	<250 <500 standardmaterial *standard materials*	<0,5	TPU NBR	●			●					Hydraulik *Hydraulic*	**66**
	PSQ	-30 +100	<250 <500 alternativt material *alternative materials*	<0,5	TPU NBR	●			●					Hydraulik *Hydraulic*	**70**
	TPD	-30 +120	<600	15	PTFE brons/bronze NBR			●	●					Hydraulik *Hydraulic*	**72**
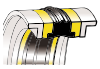	**KDSA**	-30 +100	<300	<0,5	POM NBR TPE		○		●	●				Hydraulik *Hydraulic*	**74**
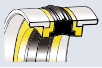	**KDSB**	-30 +100	<300	<0,5	POM NBR TPE		○		●	●				Hydraulik *Hydraulic*	**76**
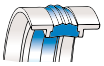	**KDSP**	-30 +100	<300	<0,5	TPU POM	●	○							Hydraulik *Hydraulic*	**80**
	KDAE	-30 +100	<400	<0,5	TPU TPE	●				●				Hydraulik *Hydraulic*	**82**

PROFILER
Profiles

STYRRINGAR / *WEAR RINGS* Gränsvärden (ej kombinerade) / *Maximum conditions (not combined)*														
Profil *Profile*	Vår ref. *Our Ref.*	Temperatur *Temperature* C°	Tryck *Pressure* Bar	Hastighet *Speed* m/s	Material *Material*	*TPU*	*POM*	*PTFE Bronze*	*NBR*	*TPE*	*Resin*	*PTFE Carbon*	*PTFE*	Sektion *Section*	Sida *Page*
	HIS **HES**	-40 +115	-	<0,8	POM fibre di vetro *glass fibres*		○							Hydraulik *Hydraulic*	**84/88**
	NG	-40 +200	-	15	PTFE brons/bronze			●						Hydraulik *Hydraulic*	**94/96**
	HPW **I-E**	-40 +130	-	<1	Fenolharts						●			Hydraulik *Hydraulic*	**96/98**

AVSTRYKARE / *WIPERS*														
	WSL	-35 +100	-	<1	TPU	●								Hydraulik *Hydraulic*	**100**
	WSG	-35 +100	-	<1	TPU STEEL	●								Hydraulik *Hydraulic*	**104**
	R09	-30 +100	-	<1	NBR STEEL				●					Hydraulik *Hydraulic*	**106**
	WWS	-35 +100	-	<1	TPU	●								Hydraulik *Hydraulic*	**108**
	WAT	-35 +100	-	<1	TPU	●								Hydraulik *Hydraulic*	**110**
	TRD	-30 +120	-	<15	PTFE brons/bronze NBR			●	●					Hydraulik *Hydraulic*	**112**
	WED	-35 +100	<20	<1	TPU	●								Hydraulik *Hydraulic*	**114**
	WEL	-35 +100	-	<1	TPU	●								Hydraulik *Hydraulic*	**118**

MONTAGE
Assembly

Montageinstruktioner

För en korrekt tätningsfunktion är det nödvändigt att unvika skador och permanenta deformeringar under montage. Vi rekommenderar även att följa ISO-reglerna för höljen och toleranser.
Vad gäller ytfinish se figur 4 och 5 för tillåtna värden. Vanligtvis rekommenderas en ytterligare polering före montage eftersom den ursprungliga slipningen oftast inte är tillräcklig.

Assembly instructions

For a correct sealing functioning it's necessary to avoid cuts or permanent deformations during the assembly process. It's also recommended to follow the ISO norms concerning housings and tolerances.
Regarding the surfaces finish, take a look at the following sketches 4 and 5 indicating the values to be respected.
A further polishing operation is usually suggested before mounting, since the only grinding operation isn't recommended .

Fig. 4

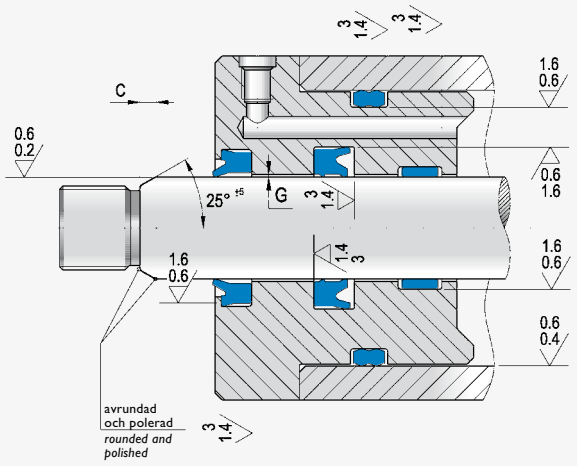

Fig. 5

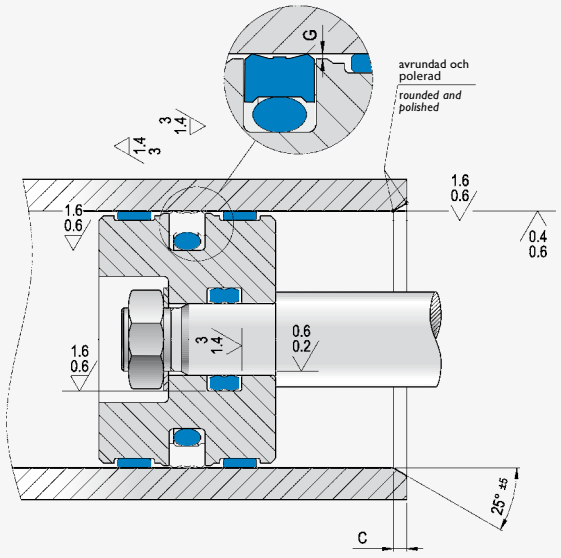

MONTAGE - PTFE
Assembly - PTFE

Montageinstruktioner PTFE

PTFE-tätningar kräver nogrannare montage jämfört med andra typer av täningar. Det är nödvändigt att avlägsna grader och/eller vassa kanter i spåren. Kolvstångstätningen monteras vanligtvis i följande ordning:
- passa in O-ringen i spåret (fig. 6);
- forma PTFE-ringen (fig. 7) utan skarpa böjar;
- passa in ringen i spåret och återställ den ursprungliga formen (fig. 8);
- kalibrera med ett koniskt plastverktyg (fig. 9)

Assembly instructions PTFE

PTFE seals require careful assembly operations in comparison to other types of seals. It is necessary to remove flashes and/or cutting edges in the grooves. The rod seal is usually assembled in the following sequence:
- fit the O-Ring into the groove (Fig.6);
- twist the PTFE ring (as shown in Fig.7), without causing any open edge curl;
- insert the ring into the groove restoring the original shape (Fig.8)
- calibrate with a plastic conical tool (Fig.9)

Fig. 6

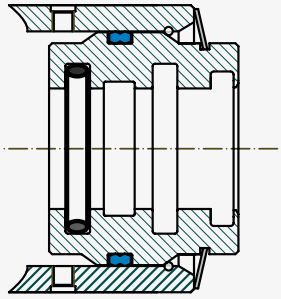

Fig. 7

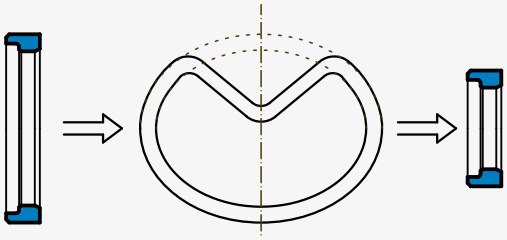

Fig. 8

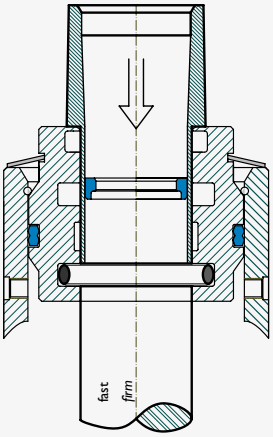

Fig. 9

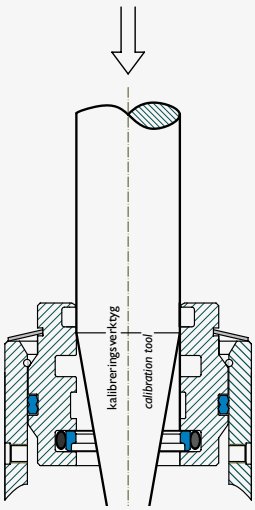

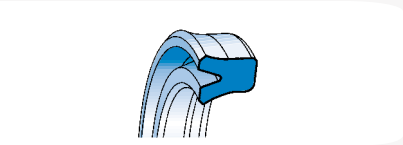

RSA

KOLVSTÅNGSTÄTNING TYP RSA

Beskrivning

RSA-tätningen har en dynamisk tätningsläpp som är kortare än den statiska och används för kolvstänger med en hög grad av felinriktning och eventuellt högt tryck.

Tekniska data

Tryck:	<400 bar vid 60 °C
Hastighet:	<0,5 m/s
Temperatur:	från -35 °C till +100 °C med toppar upp till 110 °C
Vätskor:	mineralhydraulvätskor (se tabell 1 på sida 12)

Material

Det föreslagna materialet är polyuretan typ C0, med hög elasticitetsfaktor, lågt sättningsvärde och hög slitstyrka.
Hårdheten är 93 Shore A±2.
Materialreferens: C0

Montage

För att undvika skador på tätningen, avlägsna grader och vassa kanter på hölje och kolvstång.
Tätningen ska alltid smörjas före montage för lättare isättning av kolvstång.
För mer information se installationsanvisningarna på sida 26.

RSA TYPE ROD SEAL

Description

The RSA seal has a dynamic lip shorter than the static one and it is used in cases of high rod misalignments and possible high pressure.

Technical data

Pressure:	*<400 bar, at a temperature of 60 °C*
Speed:	*<0.5 m/s*
Temperature:	*from – 35 °C to + 100 °C, with peaks up to 110 °C*
Fluids:	*mineral hydraulic fluids (see table 1, page 12)*

Material

The proposed material is a "C0" type polyurethane, with high elasticity modulus, low compression-set and high abrasion resistance.
The hardness is 93 Shore A ± 2.
Compound reference: C0

Assembly

To prevent any damage to the seal, remove any flash and cutting edges in the housing and on the rod.
The seal should always be lubricated before assembly in order to have easier insertion of the rod.

For further information please refer to the installation instructions on page 26.

RSA

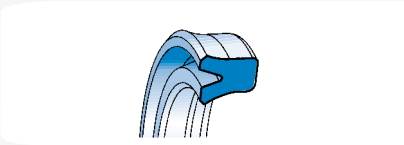

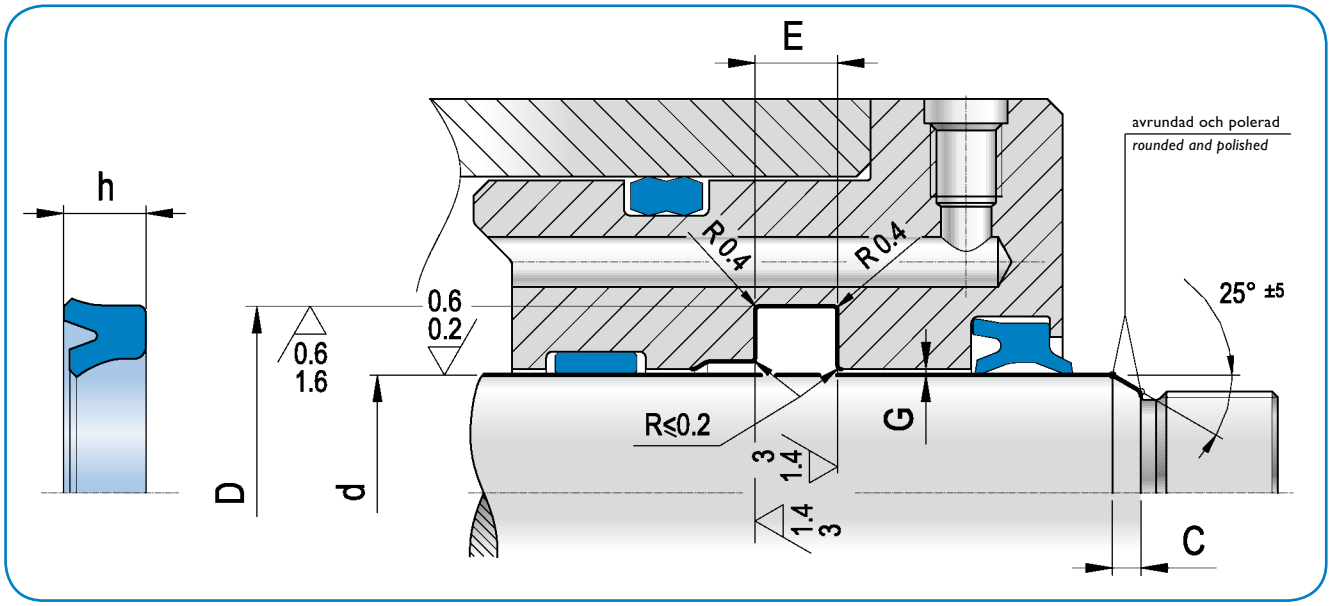

	d_{h9}	D_{H10}	h	$E_{+0,2}$	C	ART.NR. / *ITEM*
*	6,0	14,0	5,7	6,3	3,5	RSA 0060 0140 057 C0
	8,0	16,0	4,7	5,3	3,5	RSA 0080 0160 047 CO
*	8,0	16,0	5,7	6,3	3,5	RSA 0080 0160 057 C0
	8,0	18,0	8,0	9,0	3,5	RSA 0080 0180 080 C0
*	10,0	18,0	5,7	6,3	3,5	RSA 0100 0180 057 C0
	10,0	20,0	7,2	8,0	4,5	RSA 0100 0200 072 C0
*	12,0	20,0	5,0	5,5	3,5	RSA 0120 0200 050 C0
*	12,0	20,0	5,7	6,4	3,5	RSA 0120 0200 057 C0
	12,0	22,0	4,7	5,3	4,5	RSA 0120 0220 047 CO
*	12,0	22,0	7,2	8,0	4,5	RSA 0120 0220 072 C0
*	14,0	22,0	5,7	6,3	3,5	RSA 0140 0220 057 C0
*	14,0	24,0	7,2	8,0	4,5	RSA 0140 0240 072 C0
	15,0	23,0	5,7	6,3	3,5	RSA 0150 0230 057 C0
	15,0	25,0	8,0	9,0	4,5	RSA 0150 0250 080 C0
	16,0	20,6	3,3	3,6	3,5	RSA 0160 0206 033 C0
*	16,0	24,0	5,7	6,3	3,5	RSA 0160 0240 057 C0
*	16,0	26,0	7,2	8,0	4,5	RSA 0160 0260 072 C0
	18,0	24,0	4,7	5,3	3,5	RSA 0180 0240 047 C0
*	18,0	26,0	5,7	6,3	3,5	RSA 0180 0260 057 C0
	18,0	26,0	8,0	9,0	3,5	RSA 0180 0260 080 C0
*	18,0	28,0	7,2	8,0	4,5	RSA 0180 0280 072 C0
	18,0	28,0	8,0	9,0	4,5	RSA 0180 0280 080 C0
	20,0	26,0	5,0	5,5	3,5	RSA 0200 0260 050 CO
*	20,0	28,0	5,7	6,3	3,5	RSA 0200 0280 057 C0
	20,0	28,0	6,2	7,0	3,5	RSA 0200 0280 062 C0
	20,0	28,0	7,2	8,0	3,5	RSA 0200 0280 072 C0
*	20,0	30,0	7,2	8,0	4,5	RSA 0200 0300 072 C0

	d_{h9}	D_{H10}	h	$E_{+0,2}$	C	ART.NR. / *ITEM*
	20,0	30,0	8,0	9,0	4,5	RSA 0200 0300 080 C0
	20,0	35,0	10,0	11,0	5,5	RSA 0200 0350 100 C0
*	22,0	30,0	5,7	6,4	3,5	RSA 0220 0300 057 C0
	22,0	30,0	8,0	9,0	3,5	RSA 0220 0300 080 C0
	22,0	32,0	7,2	8,0	4,5	RSA 0220 0320 072 C0
*	22,0	32,0	9,0	10,0	4,5	RSA 0220 0320 090 C0
	24,0	34,0	7,2	8,0	4,5	RSA 0240 0340 072 C0
	25,0	33,0	5,7	6,3	3,5	RSA 0250 0330 057 C0
*	25,0	33,0	6,3	7,0	3,5	RSA 0250 0330 063 C0
	25,0	33,0	7,2	8,0	3,5	RSA 0250 0330 072 C0
	25,0	33,0	10,0	11,0	3,5	RSA 0250 0330 010 CO
*	25,0	35,0	7,2	8,0	4,5	RSA 0250 0350 072 C0
	25,0	38,0	9,0	10,0	5,0	RSA 0250 0380 090 C0
	25,0	40,0	10,0	11,0	5,5	RSA 0250 0400 100 C0
	28,0	36,0	5,7	6,3	3,5	RSA 0280 0360 057 C0
*	28,0	38,0	7,2	8,0	4,5	RSA 0280 0380 072 C0
	28,0	38,0	8,0	9,0	4,5	RSA 0280 0380 080 C0
	28,0	38,0	10,0	11,0	4,5	RSA 0280 0380 100 C0
	28,0	40,0	8,5	9,5	4,5	RSA 0280 0400 085 C0
*	28,0	43,0	11,5	12,5	5,5	RSA 0280 0430 115 C0
	30,0	38,0	5,7	6,3	3,5	RSA 0300 0380 057 C0
	30,0	38,0	8,0	9,0	3,5	RSA 0300 0380 080 C0
	30,0	40,0	5,7	6,3	4,5	RSA 0300 0400 057 C0
	30,0	40,0	7,2	8,0	4,5	RSA 0300 0400 072 C0
	30,0	40,0	9,5	10,5	4,5	RSA 0300 0400 095 C0
	30,0	40,0	10,0	11,0	4,5	RSA 0300 0400 100 C0
	30,0	43,0	9,0	10,0	4,5	RSA 0300 0430 090 C0

* i enlighet med normerna ISO/DIN 5597 och ISO 5597/1
– in accordance with norms ISO/DIN 5597 and ISO 5597/1

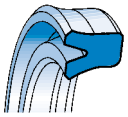

RSA

	d_{h9}	D_{H10}	h	$E_{+0,2}$	C	ART.NR. / *ITEM*
	30,0	45,0	8,0	9,0	5,5	RSA 0300 0450 080 C0
	32,0	40,0	5,7	6,3	3,5	RSA 0320 0400 057 CO
	32,0	40,0	8,0	9,0	3,5	RSA 0320 0400 080 C0
*	32,0	42,0	7,2	8,0	4,5	RSA 0320 0420 072 C0
	32,0	42,0	10,0	11,0	4,5	RSA 0320 0420 100 C0
	32,0	45,0	10,0	11,0	4,5	RSA 0320 0450 100 C0
	32,0	47,0	10,0	11,0	5,5	RSA 0320 0470 100 C0
	33,0	43,0	10,0	11,0	4,5	RSA 0330 0430 100 C0
	35,0	43,0	5,7	6,3	3,5	RSA 0350 0430 057 C0
	35,0	43,0	8,0	9,0	3,5	RSA 0350 0430 080 C0
	35,0	45,0	7,2	8,0	4,5	RSA 0350 0450 072 C0
	35,0	45,0	10,0	11,0	4,5	RSA 0350 0450 100 C0
	35,0	46,0	8,0	9,0	4,5	RSA 0350 0460 080 C0
	35,0	47,0	8,0	9,0	4,5	RSA 0350 0470 080 C0
	35,0	50,0	10,0	11,0	5,5	RSA 0350 0500 100 C0
	36,0	44,0	5,0	5,5	3,5	RSA 0360 0440 050 CO
	36,0	44,0	5,7	6,4	3,5	RSA 0360 0440 057 C0
	36,0	44,0	8,0	9,0	3,5	RSA 0360 0440 080 C0
*	36,0	46,0	7,2	8,0	4,5	RSA 0360 0460 072 C0
	36,0	46,0	10,0	11,0	4,5	RSA 0360 0460 100 C0
	36,0	48,0	7,0	8,0	4,5	RSA 0360 0480 070 C0
	36,0	48,0	8,0	9,0	4,5	RSA 0360 0480 080 C0
	36,0	51,0	10,0	11,0	5,5	RSA 0360 0510 100 C0
*	36,0	51,0	11,5	12,5	5,5	RSA 0360 0510 115 C0
	38,0	44,5	4,7	5,3	3,5	RSA 0380 0445 047 CO
	38,0	45,0	6,2	7,0	3,5	RSA 0380 0450 062 C0
	40,0	48,0	5,7	6,3	4,0	RSA 0400 0480 057 C0
	40,0	48,0	8,0	9,0	4,0	RSA 0400 0480 080 C0
*	40,0	50,0	7,2	8,0	4,5	RSA 0400 0500 072 C0
	40,0	50,0	9,0	10,0	4,5	RSA 0400 0500 090 C0
*	40,0	50,0	10,0	11,0	4,5	RSA 0400 0500 100 C0
	40,0	52,0	8,0	9,0	4,5	RSA 0400 0520 080 C0
	40,0	55,0	10,0	11,0	5,5	RSA 0400 0550 100 C0
*	40,0	55,0	11,5	12,5	5,5	RSA 0400 0550 115 C0
	40,0	60,0	12,0	13,0	6,0	RSA 0400 0600 120 C0
	45,0	53,0	5,7	6,3	4,0	RSA 0450 0530 057 C0
	45,0	53,0	10,0	11,0	4,0	RSA 0450 0530 100 C0
*	45,0	55,0	7,2	8,0	4,5	RSA 0450 0550 072 C0
	45,0	55,0	10,0	11,0	4,5	RSA 0450 0550 100 C0
	45,0	58,0	9,0	10,0	5,0	RSA 0450 0580 090 C0
	45,0	60,0	10,0	11,0	5,5	RSA 0450 0600 100 C0
*	45,0	60,0	11,5	12,5	5,5	RSA 0450 0600 115 C0
	45,0	65,0	12,0	13,0	5,5	RSA 0450 0650 120 C0
*	50,0	60,0	7,2	8,0	4,5	RSA 0500 0600 072 C0
	50,0	60,0	10,0	11,0	4,5	RSA 0500 0600 100 C0

	d_{h9}	D_{H10}	h	$E_{+0,2}$	C	ART.NR. / *ITEM*
	50,0	60,0	12,0	13,0	4,5	RSA 0500 0600 120 C0
	50,0	62,0	9,0	10,0	5,0	RSA 0500 0620 090 C0
	50,0	63,0	10,0	11,0	5,0	RSA 0500 0630 100 C0
	50,0	65,0	10,0	11,0	5,5	RSA 0500 0650 100 C0
*	50,0	65,0	11,5	12,5	5,5	RSA 0500 0650 115 C0
	50,0	70,0	12,0	13,0	6,5	RSA 0500 0700 120 C0
	52,0	62,0	10,0	11,0	4,5	RSA 0520 0620 100 C0
	55,0	63,0	12,0	13,0	3,5	RSA 0550 0630 120 C0
	55,0	65,0	7,2	8,0	4,5	RSA 0550 0650 072 C0
	55,0	65,0	10,0	11,0	4,5	RSA 0550 0650 100 C0
	55,0	68,0	10,0	11,0	5,0	RSA 0550 0680 100 C0
	55,0	70,0	10,0	11,0	5,5	RSA 0550 0700 100 CO
	55,0	75,0	12,0	13,0	6,5	RSA 0550 0750 120 C0
	56,0	66,0	10,0	11,0	5,0	RSA 0560 0660 100 C0
	56,0	71,0	10,0	11,0	6,0	RSA 0560 0710 100 C0
*	56,0	71,0	11,5	12,5	6,0	RSA 0560 0710 115 C0
	56,0	71,0	12,5	13,5	6,0	RSA 0560 0710 125 C0
	56,0	76,0	12,0	13,0	6,5	RSA 0560 0760 120 C0
	56,0	76,0	15,0	16,0	6,5	RSA 0560 0760 150 C0
	60,0	68,0	12,5	13,5	4,5	RSA 0600 0680 125 C0
	60,0	70,0	7,2	8,0	5,0	RSA 0600 0700 072 C0
	60,0	70,0	10,0	11,0	5,0	RSA 0600 0700 100 C0
	60,0	72,0	8,0	9,0	5,5	RSA 0600 0720 080 C0
	60,0	72,0	9,0	10,0	5,5	RSA 0600 0720 090 C0
	60,0	73,0	10,0	11,0	5,5	RSA 0600 0730 100 C0
	60,0	75,0	10,0	11,0	6,0	RSA 0600 0750 100 C0
	60,0	75,0	11,5	12,5	6,0	RSA 0600 0750 115 C0
	60,0	80,0	12,0	13,0	6,5	RSA 0600 0800 120 C0
	63,0	73,0	12,0	13,0	5,0	RSA 0630 0730 120 C0
	63,0	75,0	8,6	9,6	5,5	RSA 0630 0750 086 C0
	63,0	78,0	10,0	11,0	6,0	RSA 0630 0780 100 C0
*	63,0	78,0	11,5	12,5	6,0	RSA 0630 0780 115 C0
	63,0	83,0	15,0	16,0	6,5	RSA 0630 0830 150 C0
	65,0	75,0	10,0	11,0	5,0	RSA 0650 0750 100 C0
	65,0	77,0	8,6	9,6	5,5	RSA 0650 0770 086 C0
	65,0	77,0	9,0	10,0	5,5	RSA 0650 0770 090 C0
	65,0	80,0	10,0	11,0	6,0	RSA 0650 0800 100 C0
	65,0	85,0	12,0	13,0	6,5	RSA 0650 0850 120 C0
*	70,0	80,0	7,2	8,0	5,0	RSA 0700 0800 072 C0
	70,0	80,0	12,0	13,0	5,0	RSA 0700 0800 120 C0
	70,0	82,0	8,6	9,6	6,0	RSA 0700 0820 086 C0
	70,0	85,0	10,0	11,0	6,0	RSA 0700 0850 100 C0
*	70,0	85,0	11,5	12,5	6,0	RSA 0700 0850 115 C0
*	70,0	85,0	12,0	13,0	6,0	RSA 0700 0850 120 C0
*	70,0	90,0	15,0	16,0	7,0	RSA 0700 0900 150 C0

* i enlighet med normerna ISO/DIN 5597 och ISO 5597/1 – *in accordance with ISO/DIN 5597 and ISO 5597/1 norms*

RSA

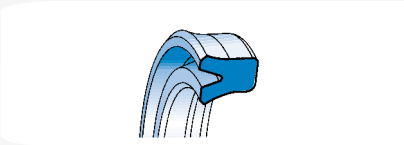

	d_{h9}	D_{H10}	h	$E_{+0,2}$	C	ART.NR. / *ITEM*
	75,0	85,0	7,2	8,0	7,0	RSA 0750 0850 072 C0
	75,0	87,0	8,6	9,6	6,0	RSA 0750 0870 086 C0
	75,0	90,0	12,0	13,0	6,0	RSA 0750 0900 120 C0
	75,0	95,0	12,0	13,0	7,0	RSA 0750 0950 120 C0
	80,0	90,0	7,2	8,0	5,0	RSA 0800 0900 072 C0
	80,0	90,0	10,0	11,0	5,0	RSA 0800 0900 100 C0
	80,0	90,0	12,0	13,0	5,0	RSA 0800 0900 120 C0
	80,0	92,0	8,6	9,6	5,5	RSA 0800 0920 086 C0
	80,0	95,0	10,0	11,0	6,0	RSA 0800 0950 100 C0
*	80,0	95,0	11,5	12,5	6,0	RSA 0800 0950 115 C0
	80,0	95,0	12,0	13,0	6,0	RSA 0800 0950 120 C0
	80,0	100,0	12,0	13,0	7,0	RSA 0800 1000 120 C0
	80,0	100,0	12,5	13,5	7,0	RSA 0800 1000 125 C0
*	80,0	100,0	15,0	16,0	7,0	RSA 0800 1000 150 C0
	85,0	100,0	11,0	12,0	6,0	RSA 0850 1000 110 C0
	85,0	100,0	12,0	13,0	6,0	RSA 0850 1000 120 C0
	85,0	105,0	12,0	13,0	7,0	RSA 0850 1050 120 C0
	90,0	100,0	11,5	12,5	5,5	RSA 0900 1000 115 C0
*	90,0	105,0	8,5	9,5	6,0	RSA 0900 1050 085 C0
*	90,0	105,0	11,5	12,5	6,0	RSA 0900 1050 115 C0
*	90,0	105,0	12,0	13,0	6,0	RSA 0900 1050 120 C0
	90,0	110,0	12,0	13,0	7,0	RSA 0900 1100 120 C0
*	90,0	110,0	15,0	16,0	7,0	RSA 0900 1100 150 C0
	95,0	110,0	12,0	13,0	6,0	RSA 0950 1100 120 C0
	95,0	115,0	12,0	13,0	7,0	RSA 0950 1150 120 C0
	100,0	115,0	12,0	13,0	6,0	RSA 1000 1150 120 C0
*	100,0	120,0	12,0	13,0	7,0	RSA 1000 1200 120 C0
*	100,0	120,0	15,0	16,0	7,0	RSA 1000 1200 150 C0
*	100,0	125,0	19,0	20,0	8,0	RSA 1000 1250 190 C0
	105,0	120,0	11,5	12,5	6,0	RSA 1050 1200 115 C0

	d_{h9}	D_{H10}	h	$E_{+0,2}$	C	ART.NR. / *ITEM*
	105,0	125,0	12,0	13,0	7,0	RSA 1050 1250 120 C0
	105,0	125,0	15,0	16,0	7,0	RSA 1050 1250 150 C0
	110,0	125,0	11,0	12,0	6,0	RSA 1100 1250 110 CO
	110,0	130,0	12,0	13,0	7,0	RSA 1100 1300 120 C0
*	110,0	130,0	15,0	16,0	7,0	RSA 1100 1300 150 C0
	115,0	135,0	12,0	13,0	7,0	RSA 1150 1350 120 C0
	120,0	135,0	11,5	12,5	6,0	RSA 1200 1350 115 C0
	120,0	140,0	12,0	13,0	7,0	RSA 1200 1400 120 C0
	120,0	140,0	15,0	16,0	7,0	RSA 1200 1400 150 C0
*	125,0	145,0	15,0	16,0	7,0	RSA 1250 1450 150 C0
	130,0	150,0	12,0	13,0	7,0	RSA 1300 1500 120 C0
	130,0	150,0	15,0	16,0	7,0	RSA 1300 1500 150 C0
*	140,0	160,0	15,0	16,0	7,0	RSA 1400 1600 150 C0
	150,0	170,0	15,0	16,0	7,0	RSA 1500 1700 150 C0
	160,0	180,0	12,0	13,0	7,0	RSA 1600 1800 120 CO
	160,0	180,0	15,0	16,0	7,0	RSA 1600 1800 150 C0
	170,0	190,0	15,0	16,0	7,0	RSA 1700 1900 150 C0
	180,0	200,0	15,0	16,0	7,0	RSA 1800 2000 150 C0
	190,0	210,0	15,0	16,0	7,0	RSA 1900 2100 150 C0
	200,0	220,0	15,0	16,0	7,0	RSA 2000 2200 150 C0
	200,0	225,0	16,0	17,0	8,0	RSA 2000 2250 160 C0
	210,0	230,0	15,0	16,0	7,0	RSA 2100 2300 150 C0
	220,0	240,0	15,0	16,0	7,0	RSA 2200 2400 150 C0
	230,0	250,0	15,0	16,0	7,0	RSA 2300 2500 150 C0
	240,0	260,0	15,0	16,0	7,0	RSA 2400 2600 150 C0
	250,0	270,0	15,0	16,0	7,0	RSA 2500 2700 150 C0

* i enlighet med normerna ISO/DIN 5597 och ISO 5597/1
- in accordance with ISO/DIN 5597 and ISO 5597/1 norms

OBS: Kontakta vår tekniska avdelning för dimensioner som inte finns i katalogen.
Remark: please contact our technical dept. for further dimensions not included in the catalogue.

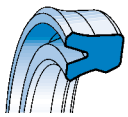

RSB

KOLVSTÅNGSTÄTNING TYP RSB

Beskrivning

Tätningar typ RSB liknar typ RSA, men har på den dynamiska sidan en multifunktionell tätningsläpp som:
- miskar stick-slip-effekten tack vare att den håller olja mellan sekundär- och huvudtätningsläpp;
- hindrar yttre föroreningar;
- motverkar materialets krympning vid låga temperaturer;
- fungerar som en stabilisator.

Tekniska data

Tryck:	<400 bar vid 60 °C
Hastighet:	<0,5 m/s
Temperatur:	från -35 °C till +100 °C med toppar upp till 110 °C
Vätskor:	mineralhydraulvätskor (se tabell 1 på sida 12)

Material

Det föreslagna materialet är polyuretan typ C0, med hög elasticitetsfaktor, lågt sättningsvärde och hög slitstyrka.
Hårdheten är 93 Shore A±2.
Materialreferens: C0

Montage

För att undvika skador på tätningen, avlägsna grader och vassa kanter på hölje och kolvstång.
Tätningen ska alltid smörjas före montage för lättare isättning av kolvstång.
För mer information se installationsanvisningarna på sida 26.

RSB TYPE ROD SEAL

Description

The RSB seal type is similar to the RSA type, but on the dynamic side, it presents a multifunctional double lip which:
- reduces stick-slip effects thanks because it keeps oil between the secondary lip and the main one;
- stops any external impurities;
- faces the material shrinkage at low temperatures;
- acts as a stabilizer.

Technical data

Pressure:	*<400 bar at a temperature of 60 °C*
Speed:	*<0.5 m/s*
Temperature:	*from - 35 °C to + 100 °C with peaks till 110 °C*
Fluids:	*mineral hydraulic fluids (see table 1, page 12)*

Material

The proposed material is a "C0" type polyurethane, with high elasticity modulus, low compression-set and high abrasion resistance.
The hardness is 93 Shore A ± 2.
Compound reference: C0

Assembly

To prevent any damage to the seal, remove any flash and cutting edges in the housing and on the rod.
The seal should always be lubricated before assembly in order to have easier insertion of the rod.
For further information please refer to the installation instructions on page 26.

RSB

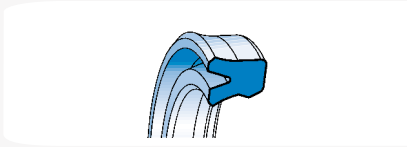

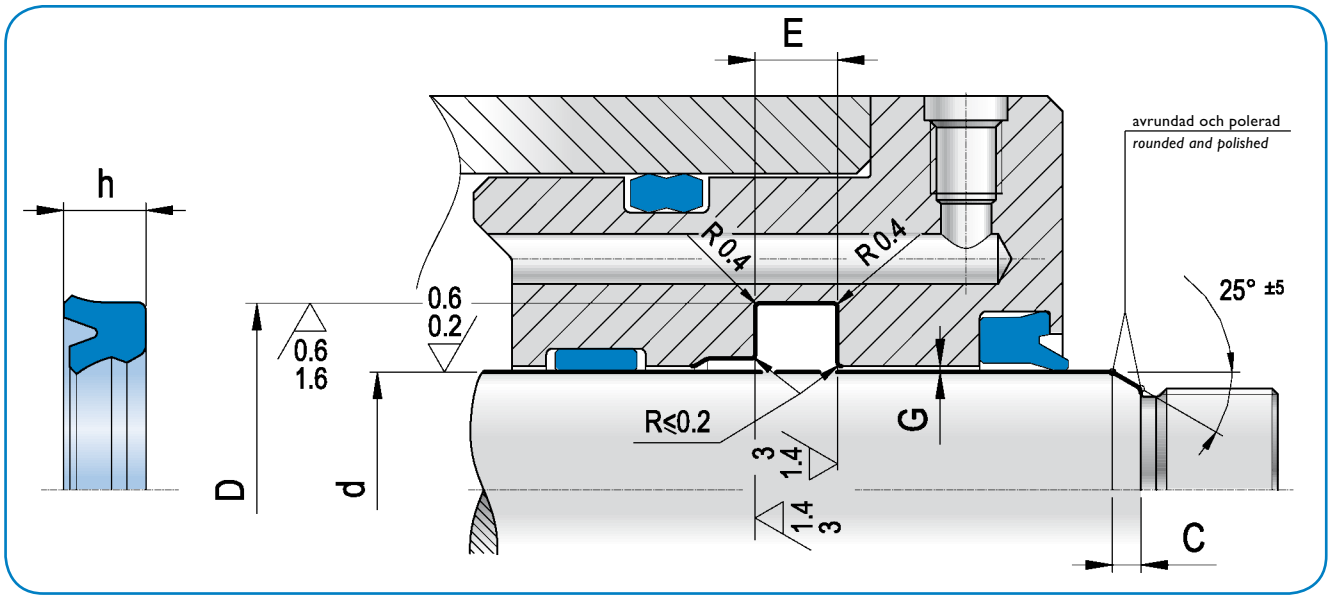

RSA
RSB
RSB2
RSC
RSD
TSS
RSO
RBR
RPS

d_{h9}	D_{H10}	h	$E_{+0,2}$	C	ART.NR. / *ITEM*
6,0	14,0	5,7	6,3	3,5	RSB 0060 0140 057 C0
8,0	16,0	5,7	6,3	3,5	RSB 0080 0160 057 C0
10,0	18,0	5,7	6,3	3,5	RSB 0100 0180 057 C0
10,0	20,0	7,0	8,0	4,5	RSB 0100 0200 070 C0
12,0	19,0	5,0	5,6	3,5	RSB 0120 0190 050 C0
12,0	20,0	5,7	6,3	4,0	RSB 0120 0200 057 C0
12,0	22,0	7,0	8,0	4,5	RSB 0120 0220 070 C0
12,0	22,0	8,0	9,0	4,5	RSB 0120 0220 080 CO
14,0	20,0	5,8	6,3	4,0	RSB 0140 0200 058 CO
14,0	21,0	5,0	5,6	4,0	RSB 0140 0210 050 C0
14,0	22,0	5,7	6,3	4,0	RSB 0140 0220 057 C0
14,0	24,0	7,3	8,0	4,5	RSB 0140 0240 073 C0
15,0	23,0	5,7	6,3	4,0	RSB 0150 0230 057 C0
16,0	24,0	5,7	6,3	4,0	RSB 0160 0240 057 C0
16,0	26,0	7,3	8,0	4,5	RSB 0160 0260 073 C0
18,0	25,0	5,0	5,6	3,5	RSB 0180 0250 050 C0
18,0	26,0	5,7	6,3	4,0	RSB 0180 0260 057 C0
18,0	28,0	7,3	8,0	4,5	RSB 0180 0280 073 C0
20,0	28,0	4,3	5,0	4,0	RSB 0200 0280 043 C0
20,0	28,0	5,7	6,3	4,0	RSB 0200 0280 057 C0
20,0	30,0	7,3	8,0	4,5	RSB 0200 0300 073 C0
22,0	29,0	5,0	5,6	3,5	RSB 0220 0290 050 C0
22,0	30,0	5,5	6,0	4,5	RSB 0220 0300 055 CO
22,0	32,0	7,3	8,0	4,5	RSB 0220 0320 073 C0
25,0	33,0	5,7	6,3	4,0	RSB 0250 0330 057 C0
25,0	33,0	7,3	8,0	4,0	RSB 0250 0330 073 CO
25,0	35,0	7,3	8,0	4,5	RSB 0250 0350 073 C0
28,0	36,0	5,7	6,3	4,0	RSB 0280 0360 057 C0
28,0	36,0	7,3	8,0	4,0	RSB 0280 0360 073 C0
28,0	38,0	5,7	6,3	4,5	RSB 0280 0380 057 C0

d_{h9}	D_{H10}	h	$E_{+0,2}$	C	ART.NR. / *ITEM*
28,0	38,0	7,3	8,0	4,5	RSB 0280 0380 073 C0
28,0	38,0	8,0	9,0	4,5	RSB 0280 0380 080 C0
28,0	43,0	11,5	12,5	5,0	RSB 0280 0430 115 C0
30,0	38,0	5,7	6,3	4,0	RSB 0300 0380 057 C0
30,0	40,0	6,0	7,0	4,5	RSB 0300 0400 060 C0
30,0	40,0	7,3	8,0	4,5	RSB 0300 0400 073 C0
30,0	40,0	8,0	9,0	4,5	RSB 0300 0400 080 C0
32,0	40,0	5,7	6,3	4,0	RSB 0320 0400 057 C0
32,0	40,0	6,0	7,0	4,0	RSB 0320 0400 060 C0
32,0	40,0	6,7	7,7	4,0	RSB 0320 0400 067 C0
32,0	42,0	5,7	6,3	4,5	RSB 0320 0420 057 C0
32,0	42,0	7,3	8,0	4,5	RSB 0320 0420 073 C0
35,0	42,0	7,0	8,0	4,0	RSB 0350 0420 070 C0
35,0	43,0	5,7	6,3	4,0	RSB 0350 0430 057 C0
35,0	43,0	6,0	7,0	5,0	RSB 0350 0430 060 CO
35,0	45,0	6,0	7,0	5,0	RSB 0350 0450 060 CO
35,0	45,0	6,7	7,7	5,0	RSB 0350 0450 067 CO
35,0	45,0	7,0	8,0	5,0	RSB 0350 0450 070 C0
35,0	45,0	7,3	8,0	5,0	RSB 0350 0450 073 CO
35,0	45,0	12,0	13,0	5,0	RSB 0350 0450 120 CO
35,0	50,0	9,0	10,0	5,5	RSB 0350 0500 090 C0
36,0	44,0	5,7	6,3	4,5	RSB 0360 0440 057 C0
36,0	44,0	6,3	7,0	4,5	RSB 0360 0440 063 C0
36,0	46,0	7,0	8,0	5,0	RSB 0360 0460 070 CO
36,0	46,0	7,3	8,0	5,0	RSB 0360 0460 073 C0
36,0	46,0	8,0	9,0	5,0	RSB 0360 0460 080 CO
38,0	48,0	8,0	9,0	5,0	RSB 0380 0480 080 C0
40,0	48,0	5,7	6,3	4,5	RSB 0400 0480 057 C0
40,0	50,0	6,0	7,0	4,5	RSB 0400 0500 060 C0
40,0	50,0	7,0	8,0	5,0	RSB 0400 0500 070 CO

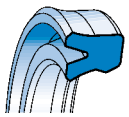

RSB

d_{h9}	D_{H10}	h	$E_{+0,2}$	C	ART.NR. / *ITEM*
40,0	50,0	7,3	8,0	5,0	RSB 0400 0500 073 C0
40,0	50,0	10,0	11,0	5,0	RSB 0400 0500 100 CO
40,0	55,0	10,0	11,0	5,5	RSB 0400 0550 100 C0
40,0	55,0	11,5	12,5	5,5	RSB 0400 0550 115 C0
40,0	55,0	9,0	10,0	5,5	RSB 0400 0550 090 C0
42,0	50,0	8,0	9,0	4,5	RSB 0420 0500 080 C0
42,0	50,0	11,5	12,5	4,5	RSB 0420 0500 115 C0
42,0	53,0	9,0	10,0	5,0	RSB 0420 0530 090 C0
45,0	53,0	5,7	6,3	4,5	RSB 0450 0530 057 C0
45,0	53,0	10,0	11,0	4,5	RSB 0450 0530 100 C0
45,0	53,0	11,5	12,5	4,5	RSB 0450 0530 115 C0
45,0	55,0	5,7	6,3	5,0	RSB 0450 0550 057 C0
45,0	55,0	6,0	7,0	4,5	RSB 0450 0550 060 C0
45,0	55,0	7,3	8,0	5,0	RSB 0450 0550 073 C0
45,0	55,0	11,5	12,5	5,0	RSB 0450 0550 115 C0
45,0	60,0	11,5	12,5	5,5	RSB 0450 0600 115 C0
46,0	56,0	10,0	11,0	5,0	RSB 0460 0560 100 C0
48,0	56,0	11,5	12,5	4,5	RSB 0480 0560 115 C0
48,0	56,0	12,0	13,0	4,5	RSB 0480 0560 120 C0
50,0	57,0	7,3	8,0	4,5	RSB 0500 0570 073 CO
50,0	57,0	10,0	11,0	4,5	RSB 0500 0570 100 CO
50,0	58,0	11,5	12,5	4,5	RSB 0500 0580 115 C0
50,0	59,0	10,0	11,0	5,0	RSB 0500 0590 100 CO
50,0	60,0	6,0	7,0	4,5	RSB 0500 0600 060 C0
50,0	60,0	7,3	8,0	5,0	RSB 0500 0600 073 C0
50,0	60,0	10,0	11,0	5,0	RSB 0500 0600 100 C0
50,0	65,0	9,0	10,0	5,5	RSB 0500 0650 090 C0
50,0	65,0	10,0	11,0	5,5	RSB 0500 0650 100 C0
50,0	65,0	11,5	12,5	5,5	RSB 0500 0650 115 C0
50,0	70,0	10,0	11,0	6,0	RSB 0500 0700 100 C0
50,0	70,0	12,0	13,0	7,0	RSB 0500 0700 120 C0
55,0	63,0	11,5	12,5	4,5	RSB 0550 0630 115 C0
55,0	65,0	6,0	7,0	4,5	RSB 0550 0650 060 C0
55,0	65,0	7,3	8,0	5,0	RSB 0550 0650 073 C0
55,0	65,0	8,5	9,5	5,0	RSB 0550 0650 085 C0
55,0	65,0	10,0	11,0	5,0	RSB 0550 0650 100 C0
55,0	68,0	10,0	11,0	5,0	RSB 0550 0680 100 C0
55,0	70,0	9,0	10,0	5,5	RSB 0550 0700 090 C0
55,0	75,0	12,0	13,0	5,0	RSB 0550 0750 120 C0
56,0	66,0	6,0	7,0	5,0	RSB 0560 0660 060 C0
56,0	71,0	9,0	10,0	5,5	RSB 0560 0710 090 C0
56,0	71,0	10,0	11,0	5,5	RSB 0560 0710 100 C0
56,0	71,0	11,5	12,5	5,5	RSB 0560 0710 115 C0
56,0	76,0	15,0	16,0	6,0	RSB 0560 0760 150 C0
60,0	68,0	11,5	12,5	4,5	RSB 0600 0680 115 C0
60,0	70,0	6,0	7,0	5,0	RSB 0600 0700 060 C0
60,0	70,0	7,3	8,0	5,0	RSB 0600 0700 073 C0
60,0	70,0	10,0	11,0	5,0	RSB 0600 0700 100 C0

d_{h9}	D_{H10}	h	$E_{+0,2}$	C	ART.NR. / *ITEM*
60,0	70,0	11,5	12,5	5,0	RSB 0600 0700 115 C0
60,0	73,0	10,0	11,0	5,5	RSB 0600 0730 100 C0
60,0	75,0	9,0	10,0	5,5	RSB 0600 0750 090 C0
60,0	75,0	10,0	11,0	5,5	RSB 0600 0750 100 C0
60,0	75,0	11,5	12,5	5,5	RSB 0600 0750 115 C0
60,0	80,0	12,0	13,0	7,0	RSB 0600 0800 120 C0
63,0	73,0	6,0	7,0	5,0	RSB 0630 0730 060 C0
63,0	78,0	10,0	11,0	5,5	RSB 0630 0780 100 C0
63,0	78,0	11,5	12,5	5,5	RSB 0630 0780 115 C0
63,0	83,0	12,0	13,0	7,0	RSB 0630 0830 120 C0
63,0	83,0	15,0	16,0	7,0	RSB 0630 0830 150 C0
65,0	73,0	11,5	12,5	4,5	RSB 0650 0730 115 C0
65,0	75,0	6,0	7,0	5,0	RSB 0650 0750 060 C0
65,0	75,0	7,0	8,0	5,5	RSB 0650 0750 070 CO
65,0	75,0	7,3	8,0	5,0	RSB 0650 0750 073 C0
65,0	75,0	10,0	11,0	5,0	RSB 0650 0750 100 C0
65,0	75,0	12,0	13,0	5,5	RSB 0650 0750 120 CO
65,0	78,0	10,0	11,0	5,5	RSB 0650 0780 100 C0
65,0	80,0	9,0	10,0	5,5	RSB 0650 0800 090 C0
65,0	80,0	11,5	12,5	5,5	RSB 0650 0800 115 C0
65,0	85,0	12,0	13,0	7,0	RSB 0650 0850 120 C0
67,0	75,0	11,5	12,5	5,0	RSB 0670 0750 115 C0
67,0	77,0	6,0	7,0	5,0	RSB 0670 0770 060 C0
70,0	78,0	11,5	12,5	4,5	RSB 0700 0780 115 C0
70,0	80,0	6,0	7,0	5,0	RSB 0700 0800 060 C0
70,0	80,0	7,3	8,0	5,5	RSB 0700 0800 073 C0
70,0	80,0	11,5	12,5	5,0	RSB 0700 0800 115 C0
70,0	83,0	10,0	11,0	5,5	RSB 0700 0830 100 C0
70,0	85,0	9,0	10,0	5,5	RSB 0700 0850 090 C0
70,0	85,0	10,0	11,0	5,5	RSB 0700 0850 100 C0
70,0	85,0	11,5	12,5	6,0	RSB 0700 0850 115 C0
70,0	90,0	12,0	13,0	7,0	RSB 0700 0900 120 C0
70,0	90,0	15,0	16,0	7,0	RSB 0700 0900 150 C0
71,0	81,0	6,0	11,0	5,0	RSB 0710 0810 060 C0
71,0	81,0	8,0	9,0	5,0	RSB 0710 0810 080 C0
75,0	83,0	7,0	8,0	5,0	RSB 0750 0830 070 CO
75,0	83,0	11,5	12,5	5,0	RSB 0750 0830 115 C0
75,0	85,0	6,0	7,0	5,5	RSB 0750 0850 060 C0
75,0	85,0	10,0	11,0	5,5	RSB 0750 0850 100 C0
75,0	85,0	11,5	12,5	5,5	RSB 0750 0850 115 C0
75,0	88,0	10,0	11,0	5,5	RSB 0750 0880 100 C0
75,0	90,0	9,0	10,0	5,5	RSB 0750 0900 090 C0
75,0	90,0	11,5	12,5	6,0	RSB 0750 0900 115 CO
75,0	95,0	12,0	13,0	7,0	RSB 0750 0950 120 C0
78,0	86,0	11,5	12,5	5,0	RSB 0780 0860 115 C0
80,0	88,0	11,5	12,5	5,0	RSB 0800 0880 115 C0
80,0	90,0	6,0	7,0	5,5	RSB 0800 0900 060 C0
80,0	90,0	7,3	8,0	5,5	RSB 0800 0900 073 C0

ARTIC SEALS

KLINGER Sweden

RSB

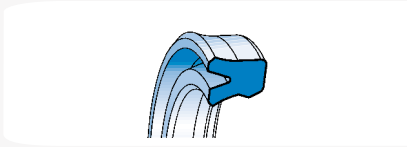

d_{h9}	D_{H10}	h	$E_{+0,2}$	C	ART.NR. / *ITEM*
80,0	90,0	10,0	11,0	5,5	RSB 0800 0900 100 C0
80,0	93,0	10,0	11,0	5,5	RSB 0800 0930 100 C0
80,0	95,0	9,0	10,0	6,0	RSB 0800 0950 090 C0
80,0	95,0	10,0	11,0	6,0	RSB 0800 0950 100 C0
80,0	95,0	11,5	12,5	6,0	RSB 0800 0950 115 C0
80,0	100,0	12,0	13,0	7,0	RSB 0800 1000 120 C0
80,0	100,0	15,0	16,0	7,0	RSB 0800 1000 150 C0
85,0	93,0	11,5	12,5	5,0	RSB 0850 0930 115 C0
85,0	100,0	9,0	10,0	6,0	RSB 0850 1000 090 C0
85,0	100,0	10,0	11,0	6,0	RSB 0850 1000 100 C0
85,0	100,0	11,5	12,5	6,0	RSB 0850 1000 115 C0
85,0	105,0	12,0	13,0	7,0	RSB 0850 1050 120 C0
90,0	98,0	11,5	12,5	5,0	RSB 0900 0980 115 C0
90,0	100,0	7,3	8,0	5,5	RSB 0900 1000 073 C0
90,0	100,0	11,5	12,5	5,5	RSB 0900 1000 115 C0
90,0	105,0	9,0	10,0	6,0	RSB 0900 1050 090 C0
90,0	105,0	10,0	11,0	6,0	RSB 0900 1050 100 C0
90,0	105,0	11,5	12,5	6,0	RSB 0900 1050 115 C0
90,0	110,0	12,0	13,0	7,0	RSB 0900 1100 120 C0
90,0	110,0	15,0	16,0	7,0	RSB 0900 1100 150 C0
93,0	101,0	11,5	12,5	5,0	RSB 0930 1010 115 C0
95,0	103,0	11,5	12,5	5,0	RSB 0950 1030 115 C0
95,0	105,0	12,0	13,0	5,5	RSB 0950 1050 120 C0
95,0	110,0	9,0	10,0	7,0	RSB 0950 1100 090 C0
95,0	110,0	10,0	11,0	6,0	RSB 0950 1100 100 CO
95,0	115,0	12,0	13,0	7,0	RSB 0950 1150 120 C0
95,0	115,0	13,5	14,5	5,5	RSB 0950 1150 135 C0
97,0	105,0	11,5	12,5	5,0	RSB 0970 1050 115 C0
100,0	108,0	11,5	12,5	5,5	RSB 1000 1080 115 C0
100,0	115,0	9,0	10,0	6,0	RSB 1000 1150 090 C0
100,0	115,0	10,0	11,0	6,0	RSB 1000 1150 100 C0
100,0	120,0	11,8	13,0	7,0	RSB 1000 1200 118 C0
100,0	120,0	12,0	13,0	7,0	RSB 1000 1200 120 C0
100,0	120,0	15,0	16,0	7,0	RSB 1000 1200 150 C0
105,0	113,0	11,5	12,5	5,0	RSB 1050 1130 115 C0
105,0	115,0	11,5	12,5	5,5	RSB 1050 1150 115 C0
105,0	120,0	9,0	10,0	6,0	RSB 1050 1200 090 C0
105,0	120,0	10,0	11,0	6,0	RSB 1050 1200 100 C0
105,0	125,0	12,0	13,0	7,0	RSB 1050 1250 120 C0
106,0	121,0	9,0	10,0	6,0	RSB 1060 1210 090 C0
106,0	121,0	10,0	11,0	6,0	RSB 1060 1210 100 C0
110,0	118,0	11,5	12,5	5,0	RSB 1100 1180 115 C0
110,0	125,0	9,0	10,0	6,0	RSB 1100 1250 090 C0
110,0	125,0	9,6	10,6	6,0	RSB 1100 1250 096 C0
110,0	125,0	10,0	11,0	6,0	RSB 1100 1250 100 C0
110,0	130,0	10,0	11,0	7,0	RSB 1100 1300 100 C0
110,0	130,0	12,0	13,0	7,0	RSB 1100 1300 120 C0
110,0	130,0	15,0	16,0	7,0	RSB 1100 1300 150 C0

d_{h9}	D_{H10}	h	$E_{+0,2}$	C	ART.NR. / *ITEM*
110,0	135,0	19,0	20,0	8,0	RSB 1100 1350 190 C0
112,0	127,0	9,0	10,0	6,0	RSB 1120 1270 090 C0
112,0	127,0	10,0	11,0	6,0	RSB 1120 1270 100 C0
112,0	125,0	9,0	10,0	5,5	RSB 1120 1250 090 C0
115,0	123,0	11,5	12,5	5,0	RSB 1150 1230 115 C0
115,0	125,0	12,0	13,0	5,5	RSB 1150 1250 120 C0
115,0	130,0	9,0	10,0	6,0	RSB 1150 1300 090 C0
115,0	135,0	12,0	13,0	7,0	RSB 1150 1350 120 C0
118,0	126,0	11,5	12,5	5,0	RSB 1180 1260 115 CO
118,0	133,0	9,0	10,0	6,0	RSB 1180 1330 090 C0
118,0	133,0	10,0	11,0	6,0	RSB 1180 1330 100 C0
120,0	128,0	11,5	12,5	5,0	RSB 1200 1280 115 CO
120,0	135,0	9,0	10,0	6,0	RSB 1200 1350 090 C0
120,0	140,0	10,0	11,0	7,0	RSB 1200 1400 100 C0
120,0	140,0	12,0	13,0	7,0	RSB 1200 1400 120 C0
120,0	140,0	15,0	16,0	7,0	RSB 1200 1400 150 C0
125,0	133,0	11,5	12,5	5,0	RSB 1250 1330 115 CO
125,0	140,0	9,0	10,0	6,0	RSB 1250 1400 090 C0
125,0	145,0	12,0	13,0	7,0	RSB 1250 1450 120 C0
125,0	145,0	15,0	16,0	7,0	RSB 1250 1450 150 C0
125,0	150,0	19,0	20,0	8,0	RSB 1250 1500 190 C0
128,0	136,0	11,5	12,5	5,0	RSB 1280 1360 115 CO
130,0	145,0	9,0	10,0	6,0	RSB 1300 1450 090 C0
130,0	150,0	12,0	13,0	7,0	RSB 1300 1500 120 C0
130,0	150,0	15,0	16,0	7,0	RSB 1300 1500 150 C0
135,0	143,0	11,5	12,5	5,0	RSB 1350 1430 115 CO
140,0	148,0	11,5	12,5	5,0	RSB 1400 1480 115 CO
140,0	155,0	9,0	10,0	6,0	RSB 1400 1550 090 C0
140,0	155,0	9,6	10,6	6,0	RSB 1400 1550 096 C0
140,0	155,0	10,0	11,0	6,0	RSB 1400 1550 100 C0
140,0	160,0	15,0	16,0	7,0	RSB 1400 1600 150 C0
140,0	165,0	19,0	20,0	8,0	RSB 1400 1650 190 C0
143,0	151,0	11,5	12,5	5,0	RSB 1430 1510 115 CO
150,0	170,0	12,0	13,0	7,0	RSB 1500 1700 120 C0
150,0	170,0	15,0	16,0	7,0	RSB 1500 1700 150 C0
152,0	160,0	11,5	12,5	5,0	RSB 1520 1600 115 CO
155,0	163,0	11,5	12,5	5,0	RSB 1550 1630 115 CO
160,0	168,0	11,5	12,5	5,0	RSB 1600 1680 115 CO
170,0	180,0	12,0	13,0	5,0	RSB 1700 1800 120 CO
170,0	190,0	15,0	16,0	7,0	RSB 1700 1900 150 CO
180,0	200,0	15,0	16,0	7,0	RSB 1800 2000 150 C0
180,0	205,0	15,0	16,0	8,0	RSB 1800 2050 150 C0
200,0	225,0	15,0	16,0	8,0	RSB 2000 2250 150 C0

OBS: Kontakta vår tekniska avdelning för dimensioner som inte finns i katalogen.
Remark: please contact our technical dept. for further dimensions not included in the catalogue.

RSB2

KOLVSTÅNGSTÄTNING TYP RSB2

Beskrivning

Tätningar typ RSB2 liknar typ RSB med anti-extrusionsringar. Den här tätningen rekommenderas när spalten mellan huvud och kolvstång inte kan minskas och i fall av höga trycktoppar.

Tekniska data

Tryck:	400 bar med toppar på 500 bar vid 60 °C
Hastighet:	<0,5 m/s
Temperatur:	från -35 °C till +100 °C med toppar upp till 110 °C
Vätskor :	mineralhydraulvätskor (se tabell 1 på sida 12)

Material

Det föreslagna materialet är polyuretan typ C0, med hög elasticitetsfaktor, lågt sättningsvärde och hög slitstyrka.
Hårdheten är 93 Shore A±2.
Materialreferens: C0

Montage

För att undvika skador på tätningen, avlägsna grader och vassa kanter på hölje och kolvstång.
Tätningen ska alltid smörjas före montage för lättare isättning av kolvstång.
För mer information se installationsanvisningarna på sida 26.

RSB2 TYPE ROD SEAL

Description

The RSB2 seal type is similar to the RSB type with anti-extrusion ring. This seal is recommended when the coupling clearance between the head and the rod cannot be reduced and in the event of high pressure peaks

Technical data

Pressure:	*400 bar with peaks till 500 bar At 60 °C*
Speed :	*<0.5 m/s*
Temperature:	*- 35 °C ÷ +100 °C with peaks till +110 °C*
Fluids :	*mineral hydraulic fluids (see table 1, page 12)*

Material

The proposed material is a "C0" type polyurethane, with high elasticity modulus, low compression-set and high abrasion resistance.
The hardness is 93 Shore A ± 2.
Compound reference: C0

Assembly

To prevent any damage to the seal, remove any flash and cutting edges in the housing and on the rod.
The seal should always be lubricated before assembly in order to have easier insertion of the rod.
For further information please refer to the installation instructions on page 26.

RSB2

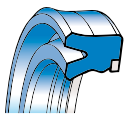

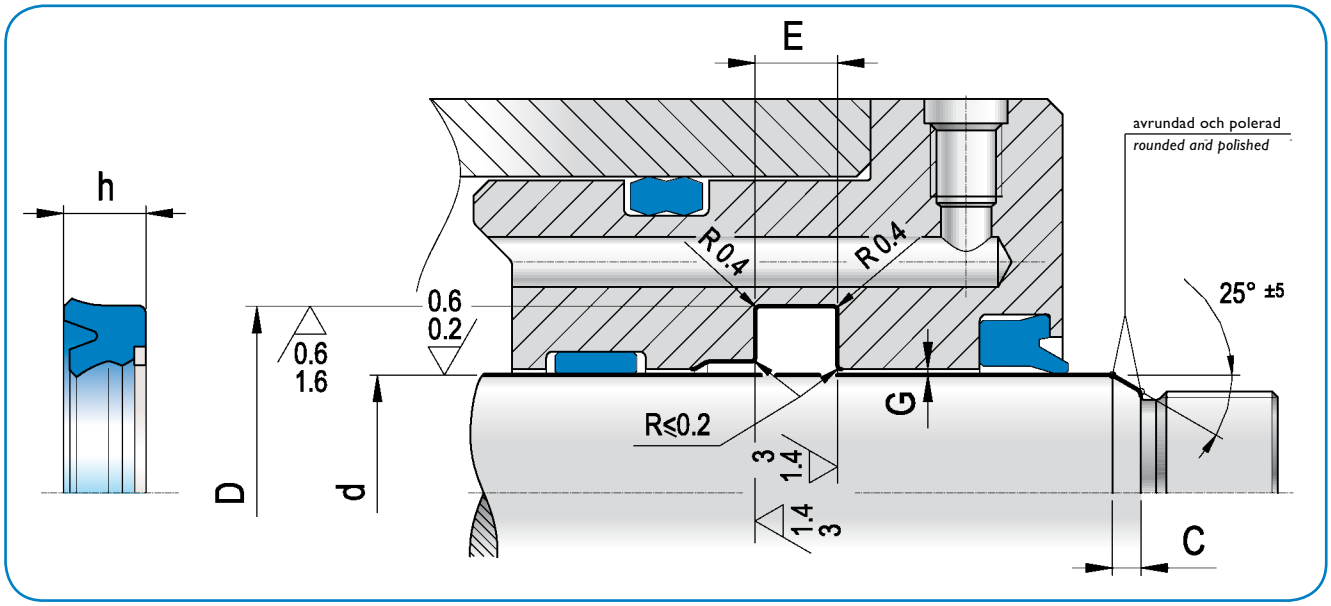

d_{h9}	D_{H10}	h	$E_{+0,2}$	C	ART.NR. / *ITEM*
40,0	55,0	10,0	11,0	5,5	RSB2 0400 0550 100 CR
42,0	51,0	10,0	11,0	4,5	RSB2 0420 0510 100 CR
45,0	60,0	10,0	11,0	5,5	RSB2 0450 0600 100 CR
50,0	59,0	10,0	11,0	4,5	RSB2 0500 0590 100 CR
50,0	60,0	7,3	8,0	5,0	RSB2 0500 0600 073 CR
50,0	65,0	10,0	11,0	5,5	RSB2 0500 0650 100 CR
50,0	70,0	12,0	13,0	6,0	RSB2 0500 0700 120 CR
56,0	71,0	11,5	12,5	5,5	RSB2 0560 0710 115 CR
60,0	69,0	10,0	11,0	4,5	RSB2 0600 0690 100 CR
60,0	75,0	11,5	12,5	5,5	RSB2 0600 0750 115 CR
60,0	80,0	12,0	13,0	6,0	RSB2 0600 0800 120 CR
63,0	78,0	11,5	12,5	5,5	RSB2 0630 0780 115 CR
63,0	83,0	12,0	13,0	6,0	RSB2 0630 0830 120 CR
65,0	80,0	11,5	12,5	5,5	RSB2 0650 0800 115 CR
70,0	80,0	7,3	8,0	5,0	RSB2 0700 0800 073 CR
70,0	85,0	11,5	12,5	5,5	RSB2 0700 0850 115 CR
75,0	95,0	13,5	14,5	6,0	RSB2 0750 0950 135 CR
80,0	95,0	11,5	12,5	5,5	RSB2 0800 0950 115 CR

d_{h9}	D_{H10}	h	$E_{+0,2}$	C	ART.NR. / *ITEM*
80,0	100,0	13,5	14,5	7,0	RSB2 0800 1000 135 CR
85,0	105,0	12,0	13,0	7,0	RSB2 0850 1050 120 CR
85,0	105,0	13,5	14,5	7,0	RSB2 0850 1050 135 CR
90,0	105,0	11,5	12,5	6,0	RSB2 0900 1050 115 CR
95,0	115,0	13,5	14,5	7,0	RSB2 0950 1150 135 CR
100,0	120,0	12,0	13,0	7,0	RSB2 1000 1200 120 CR
100,0	120,0	13,5	14,5	7,0	RSB2 1000 1200 135 CR
105,0	125,0	12,0	13,0	7,0	RSB2 1050 1250 120 CR
110,0	130,0	12,0	13,0	7,0	RSB2 1100 1300 120 CR
120,0	140,0	12,0	13,0	7,0	RSB2 1200 1400 120 CR
125,0	145,0	12,0	13,0	7,0	RSB2 1250 1450 120 CR

CR = CO (TPU 93 shore A) + RO (POM)

OBS: Kontakta vår tekniska avdelning för dimensioner som inte finns i katalogen.
Remark: please contact our technical dept. for further dimensions not included in the catalogue.

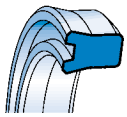

RSC

KOLVSTÅNGSTÄTNING TYP RSC

Beskrivning

Tätningar typ RSC har små dimensioner och har utvecklats för cylindrar med tryckvariationer och höga hastigheter. Profilen är utformad med ett grunt spår för att säkerställa en tät kontakt mellan de statiska och dynamiska delarna, även i trycklösa situationer.

Tekniska data

Tryck:	<400 bar vid 60 °C
Hastighet:	<0,5 m/s
Temperatur:	från -35 °C till +100 °C med toppar upp till 110 °C
Vätskor:	mineraloljor och vätskor (se tabell 1 på sida 12)

Material

Det föreslagna materialet är polyuretan typ C0, med hög elasticitetsfaktor, lågt sättningsvärde och hög slitstyrka.
Hårdheten är 93 Shore A±2.
Materialreferens: C0

Montage

För att undvika skador på tätningen, avlägsna grader och vassa kanter på hölje och kolvstång.
Tätningen ska alltid smörjas före montage för lättare isättning av kolvstång.
För mer information se installationsanvisningarna på sida 26.

RSC TYPE ROD SEAL

Description

The RSC seal has small dimensions and has been developed for cylinders used in presence of pressure variation and high speed.
The profile has been designed with a shallow groove to ensure tight contact between the static and dynamic part, even in zero pressure situations.

Technical data

Pressure:	*<400 bar at a temperature of 60 °C*
Speed:	*<0.5 m/s*
Temperature:	*from - 35 °C to + 100 °C, with peaks till 110 °C*
Fluids:	*mineral oils and fluids (see table 1, page 12)*

Material

The proposed material is a "C0" type polyurethane, with high elasticity modulus, low compression-set and high abrasion resistance.
The hardness is 93 Shore A ± 2.
Compound reference: C0

Assembly

To prevent and damage to the seal, remove any flash and cutting edges in the housing and on the rod.
The seal should always be lubricated before assembly in order to have easier insertion of the rod.
For further information please refer to the installation instructions on page 26.

RSC

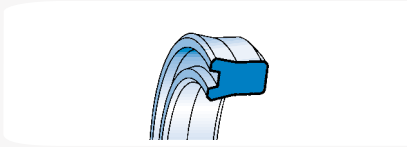

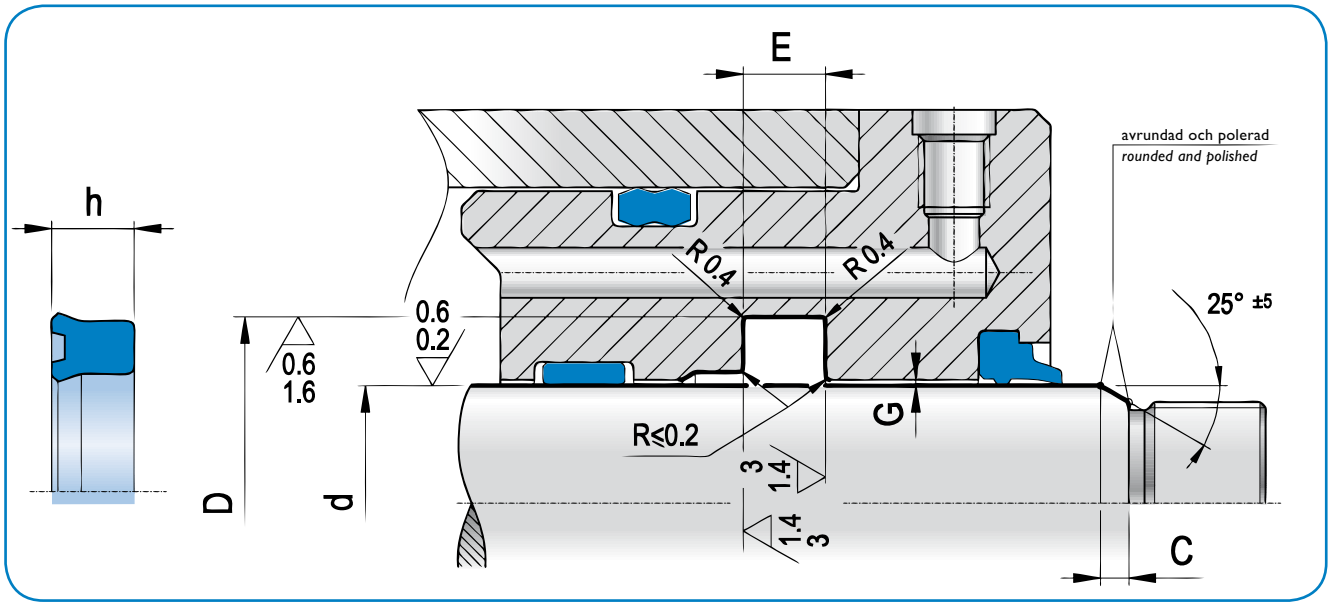

RSA
RSB
RSB2
RSC
RSD
TSS
RSO
RBR
RPS

	d_{h9}	D_{H10}	h	$E_{+0,2}$	C	ART.NR. / *ITEM*
	6,0	14,0	5,8	6,3	4,5	RSC 0060 0140 058 C0
	8,0	14,0	5,8	6,3	4,0	RSC 0080 0140 058 C0
	8,0	16,0	5,8	6,3	4,5	RSC 0080 0160 058 C0
	10,0	18,0	5,8	6,3	4,5	RSC 0100 0180 058 C0
	12,0	18,0	4,5	5,0	4,0	RSC 0120 0180 045 C0
	12,0	20,0	5,8	6,3	4,5	RSC 0120 0200 058 CO
	14,0	21,0	5,0	5,5	4,0	RSC 0140 0210 050 CO
	14,0	22,0	5,8	6,3	4,5	RSC 0140 0220 058 CO
	16,0	22,0	4,0	4,5	3,5	RSC 0160 0220 040 CO
	16,0	24,0	5,8	6,3	4,5	RSC 0160 0240 058 C0
	16,0	24,0	6,0	7,0	4,5	RSC 0160 0240 060 C0
	18,0	22,0	4,0	4,5	3,0	RSC 0180 0220 040 CO
	18,0	26,0	5,8	6,3	4,5	RSC 0180 0260 040 CO
	20,0	25,0	4,0	4,5	4,0	RSC 0200 0250 040 CO
	20,0	26,0	5,0	5,5	4,0	RSC 0200 0260 050 C0
*	20,0	28,0	5,8	6,3	4,5	RSC 0200 0280 058 C0
*	20,0	30,0	7,0	8,0	5,0	RSC 0200 0300 070 C0
	22,0	28,0	4,5	5,0	4,0	RSC 0220 0280 045 C0
	22,0	28,0	5,8	6,3	3,5	RSC 0220 0280 058 CO
	22,0	29,0	5,0	5,5	4,0	RSC 0220 0290 050 CO
*	22,0	30,0	5,8	6,3	4,5	RSC 0220 0300 058 C0
	22,0	30,0	7,0	8,0	4,5	RSC 0220 0300 070 C0
	22,0	32,0	7,0	8,0	5,0	RSC 0220 0320 070 C0
	24,0	32,0	5,7	6,3	4,5	RSC 0240 0320 057 CO
	24,0	34,0	5,7	6,3	4,5	RSC 0240 0340 057 CO
	25,0	31,0	5,0	5,5	3,5	RSC 0250 0310 050 CO
*	25,0	33,0	5,8	6,3	4,5	RSC 0250 0330 058 C0

	d_{h9}	D_{H10}	h	$E_{+0,2}$	C	ART.NR. / *ITEM*
	25,0	33,0	8,0	9,0	4,5	RSC 0250 0330 080 CO
	25,0	35,0	5,0	5,5	5,0	RSC 0250 0350 050 CO
	25,0	35,0	7,0	8,0	5,0	RSC 0250 0350 070 C0
*	28,0	36,0	5,8	6,3	4,5	RSC 0280 0360 058 C0
	28,0	38,0	5,8	6,3	5,0	RSC 0280 0380 058 C0
	28,0	38,0	7,0	8,0	5,0	RSC 0280 0380 070 C0
	30,0	38,0	5,8	6,3	4,5	RSC 0300 0380 058 C0
	30,0	38,0	6,0	7,0	4,5	RSC 0300 0380 060 C0
	30,0	38,0	7,0	8,0	4,5	RSC 0300 0380 070 CO
	30,0	38,0	8,0	9,0	4,5	RSC 0300 0380 080 C0
	30,0	40,0	7,0	8,0	5,0	RSC 0300 0400 070 C0
	30,0	40,0	10,0	11,0	5,0	RSC 0300 0400 100 C0
	32,0	40,0	6,0	7,0	4,5	RSC 0320 0400 060 C0
	32,0	40,0	8,0	9,0	4,5	RSC 0320 0400 080 C0
*	32,0	42,0	7,0	8,0	5,0	RSC 0320 0420 070 C0
	32,0	42,0	8,0	9,0	5,0	RSC 0320 0420 080 C0
	32,0	42,0	9,0	10,0	5,0	RSC 0320 0420 090 CO
	35,0	43,0	5,8	6,3	4,5	RSC 0350 0430 058 C0
	35,0	43,0	6,0	7,0	4,5	RSC 0350 0430 060 C0
	35,0	43,0	6,3	7,0	4,5	RSC 0350 0430 063 CO
	35,0	43,0	7,0	8,0	4,5	RSC 0350 0430 070 CO
	35,0	43,0	8,0	9,0	4,5	RSC 0350 0430 080 C0
	35,0	45,0	7,0	8,0	5,0	RSC 0350 0450 070 C0
	35,0	45,0	10,0	11,0	5,0	RSC 0350 0450 100 C0
	35,0	45,0	11,0	12,0	5,0	RSC 0350 0450 110 C0
*	36,0	44,0	5,8	6,3	4,5	RSC 0360 0440 058 C0
	36,0	44,0	6,0	7,0	4,5	RSC 0360 0440 060 C0

* i enlighet med normerna ISO/DIN 5597 och ISO 5597/1
– in accordance with ISO/DIN 5597 and ISO 5597/1 norms

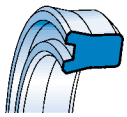

RSC

	d_{h9}	D_{H10}	h	$E_{+0,2}$	C	ART.NR. / *ITEM*
	36,0	44,0	6,3	7,0	4,5	RSC 0360 0440 063 CO
	36,0	44,0	7,0	8,0	4,5	RSC 0360 0440 070 CO
	36,0	44,0	8,0	9,0	4,5	RSC 0360 0440 080 C0
	36,0	44,0	9,0	10,0	4,5	RSC 0360 0440 090 CO
	36,0	46,0	7,0	8,0	5,0	RSC 0360 0460 070 C0
	36,0	46,0	7,2	8,0	4,5	RSC 0360 0440 072 CO
	36,0	46,0	10,0	11,0	5,0	RSC 0360 0460 100 C0
	36,0	46,0	11,0	12,0	5,0	RSC 0360 0460 110 CO
	38,0	45,0	6,0	7,0	4,5	RSC 0380 0450 060 C0
	40,0	48,0	5,8	6,3	4,5	RSC 0400 0480 058 C0
	40,0	48,0	6,0	7,0	4,5	RSC 0400 0480 060 C0
	40,0	48,0	7,0	8,0	4,5	RSC 0400 0480 070 CO
	40,0	48,0	8,0	9,0	4,5	RSC 0400 0480 080 C0
	40,0	50,0	6,0	7,0	5,0	RSC 0400 0500 060 CO
*	40,0	50,0	7,0	8,0	5,0	RSC 0400 0500 070 C0
	40,0	50,0	10,0	11,0	5,0	RSC 0400 0500 100 C0
	42,0	50,0	6,0	7,0	4,5	RSC 0420 0500 060 C0
	42,0	50,0	7,0	8,0	4,5	RSC 0420 0500 070 CO
	45,0	53,0	6,0	7,0	4,5	RSC 0450 0530 060 C0
	45,0	53,0	6,3	7,0	4,5	RSC 0450 0530 063 CO
	45,0	53,0	7,0	8,0	4,5	RSC 0450 0530 070 CO
*	45,0	55,0	5,8	6,3	5,0	RSC 0450 0550 058 C0
	45,0	55,0	6,3	7,0	5,0	RSC 0450 0550 063 CO
*	45,0	55,0	7,0	8,0	5,0	RSC 0450 0550 070 C0
	46,0	54,0	7,0	8,0	4,5	RSC 0460 0540 070 C0
	46,0	54,0	7,5	8,5	4,5	RSC 0460 0540 075 C0
	46,0	54,0	8,0	9,0	4,5	RSC 0460 0540 080 CO
	50,0	58,0	8,0	9,0	4,5	RSC 0500 0580 080 C0
	50,0	58,0	9,0	10,0	4,5	RSC 0500 0580 090 CO
*	50,0	60,0	7,0	8,0	5,0	RSC 0500 0600 070 C0
	50,0	60,0	8,0	9,0	5,0	RSC 0500 0600 080 CO
	50,0	60,0	10,0	11,0	5,0	RSC 0500 0600 100 C0
	50,0	60,0	11,0	12,0	5,0	RSC 0500 0600 110 CO
	50,0	62,0	8,0	9,0	5,5	RSC 0500 0620 080 CO
	55,0	63,0	8,0	9,0	4,5	RSC 0550 0630 080 C0
	55,0	65,0	7,0	8,0	5,0	RSC 0550 0650 070 C0
	55,0	65,0	11,0	12,0	5,0	RSC 0550 0650 110 CO
	56,0	66,0	10,0	11,0	5,0	RSC 0560 0660 100 C0
	56,0	66,0	11,0	12,0	5,0	RSC 0560 0660 110 CO
*	56,0	71,0	11,5	12,5	6,0	RSC 0560 0710 115 C0
	56,0	71,0	12,5	13,5	6,0	RSC 0560 0710 125 C0
	60,0	68,0	8,0	9,0	5,0	RSC 0600 0680 080 C0
	60,0	68,0	9,0	10,0	4,5	RSC 0600 0680 090 CO
	60,0	70,0	7,0	8,0	5,5	RSC 0600 0700 070 C0
	60,0	70,0	7,5	8,5	5,5	RSC 0600 0700 075 C0

	d_{h9}	D_{H10}	h	$E_{+0,2}$	C	ART.NR. / *ITEM*
	60,0	70,0	8,0	9,0	5,0	RSC 0600 0700 080 CO
	60,0	70,0	8,5	9,5	5,0	RSC 0600 0700 085 CO
	60,0	70,0	11,0	12,0	5,0	RSC 0600 0700 110 CO
	60,0	70,0	12,0	13,0	5,5	RSC 0600 0700 120 C0
	60,0	70,0	13,0	14,0	5,0	RSC 0600 0700 130 CO
	60,0	72,0	8,0	9,0	5,5	RSC 0600 0720 080 C0
	60,0	72,0	9,0	10,0	5,5	RSC 0600 0720 090 C0
	63,0	71,0	8,0	9,0	5,0	RSC 0630 0710 080 C0
	65,0	73,0	8,0	9,0	5,0	RSC 0650 0730 080 C0
	65,0	73,0	9,0	10,0	4,5	RSC 0650 0730 090 CO
	65,0	75,0	12,0	13,0	5,0	RSC 0650 0750 120 CO
	70,0	78,0	8,0	9,0	5,0	RSC 0700 0780 080 C0
	70,0	78,0	9,0	10,0	4,5	RSC 0700 0780 090 CO
*	70,0	80,0	6,5	7,5	5,5	RSC 0700 0800 065 C0
	70,0	80,0	7,0	8,0	5,5	RSC 0700 0800 070 C0
	70,0	80,0	7,5	8,5	5,0	RSC 0700 0800 075 CO
	70,0	80,0	8,0	9,0	5,0	RSC 0700 0800 080 CO
	70,0	80,0	12,0	13,0	5,5	RSC 0700 0800 120 C0
	70,0	80,0	13,0	14,0	5,0	RSC 0700 0800 130 CO
	70,0	82,0	9,5	10,5	6,0	RSC 0700 0820 095 C0
	70,0	82,0	10,5	11,5	6,0	RSC 0700 0820 105 CO
	70,0	85,0	11,5	12,5	6,0	RSC 0700 0850 115 CO
	70,0	85,0	12,5	13,5	6,5	RSC 0700 0850 125 CO
	75,0	83,0	8,0	9,0	5,0	RSC 0750 0830 080 C0
	75,0	83,0	9,0	10,0	4,5	RSC 0750 0830 090 CO
	75,0	85,0	7,0	8,0	5,5	RSC 0750 0850 070 C0
	75,0	85,0	8,0	9,0	5,0	RSC 0750 0850 080 CO
	76,0	84,0	8,0	9,0	5,0	RSC 0760 0840 080 C0
	76,0	84,0	9,0	10,0	4,5	RSC 0760 0840 090 CO
	80,0	88,0	8,0	9,0	5,0	RSC 0800 0880 080 C0
	80,0	88,0	9,0	10,0	4,5	RSC 0800 0880 090 CO
	80,0	90,0	7,0	8,0	5,5	RSC 0800 0900 070 C0
	80,0	90,0	8,0	9,0	5,0	RSC 0800 0900 080 CO
	80,0	90,0	12,0	13,0	5,0	RSC 0800 0900 120 CO
*	80,0	95,0	11,5	12,5	6,5	RSC 0800 0950 115 C0
	80,0	95,0	12,5	13,5	6,5	RSC 0800 0950 125 CO
	85,0	93,0	8,0	9,0	5,5	RSC 0850 0930 080 C0
	85,0	93,0	9,0	10,0	4,5	RSC 0850 0930 090 CO
	90,0	98,0	8,0	9,0	5,5	RSC 0900 0980 080 C0
	90,0	98,0	9,0	10,0	4,5	RSC 0900 0980 090 CO

* i enlighet med normerna ISO/DIN 5597 och ISO 5597/1
– in accordance with ISO/DIN 5597 and ISO 5597/1 norms

OBS: Kontakta vår tekniska avdelning för dimensioner som inte finns i katalogen.
Remark: please contact our technical dept. for further dimensions not included in the catalogue.

RSC

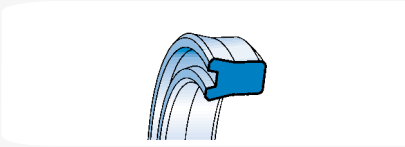

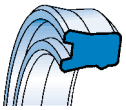

RSD

KOLVSTÅNGSTÄTNING TYP RSD

Beskrivning

Tätningar typ RSD liknar typ RSC, men har på den dynamiska sidan en multifunkionell dubbel tätningsläpp som:

- miskar stick-slip-effekten tack vare att den håller olja mellan sekundär- och huvudtätningsläpp;
- hindrar yttre föroreningar;
- motverkar materialets krympning vid låga temperaturer;
- fungerar som en stabilisator.

Tekniska data

Tryck:	<400 bar vid 60 °C
Hastighet:	<0,5 m/s
Temperatur:	från -35 °C till +100 °C med toppar upp till 110 °C
Vätskor:	mineraloljor och vätskor (se tabell 1 på sida 12)

Material

Det föreslagna materialet är polyuretan typ C0, med hög elasticitetsfaktor, lågt sättningsvärde och hög slitstyrka.
Hårdheten är 93 Shore A±2.
Materialreferens: C0

Montage

För att undvika skador på tätningen, avlägsna grader och vassa kanter på hölje och kolvstång.
Tätningen ska alltid smörjas före montage för lättare isättning av kolvstång.
För mer information se installationsanvisningarna på sida 26.

RSD TYPE ROD SEAL

Description

The RSD seal type is similar to the RSC type, but on the dynamic side, it presents a multifunctional double lip which:

- *reduces stick-slip effects thanks because it keeps oil between the secondary lip and the main one;*
- *stops any external impurities;*
- *faces the material shrinkage at low temperatures;*
- *acts as a stabilizer.*

Technical data

Pressure:	*<400 bar at a temperature of 60 °C*
Speed:	*<0.5 m/s*
Temperature:	*from - 35 °C to + 100 °C with peaks till 110 °C*
Fluids:	*mineral fluids and oils (see table 1, page 12)*

Material

The proposed material is a "C0" type polyurethane, with high elasticity modulus, low compression-set and high abrasion resistance.
The hardness is 93 Shore A ± 2.
Compound reference: C0

Assembly

To prevent any damage to the seal, remove any flash and cutting edges in the housing and on the rod.
The seal should always be lubricated before assembly in order to have easier insertion of the rod.
For further information please refer to the installation instructions on page 26.

RSD

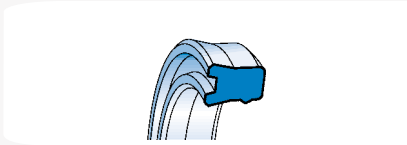

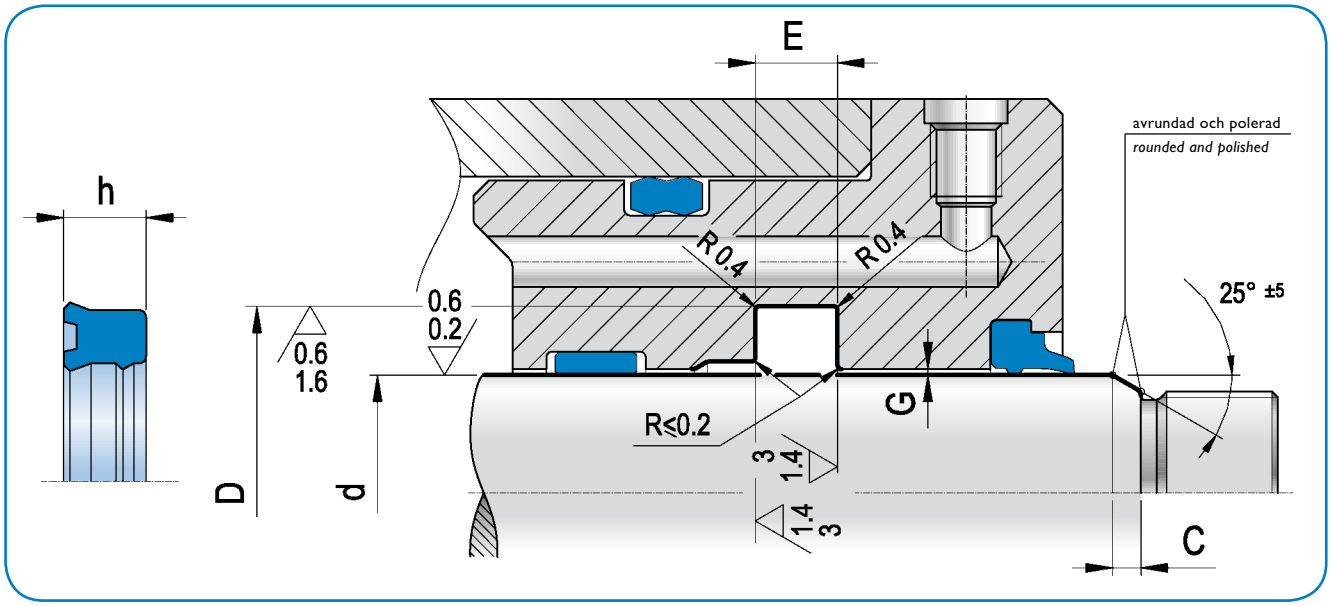

RSA
RSB
RSB2
RSC
RSD
TSS
RSO
RBR
RPS

	d_{h9}	D_{H10}	h	$E_{+0,2}$	C	ART.NR. / *ITEM*
*	6,0	14,0	5,8	6,3	3,5	RSD 0060 0140 058 C0
*	8,0	14,0	5,7	6,3	3,5	RSD 0080 0140 057 C0
*	8,0	16,0	5,8	6,3	3,5	RSD 0080 0160 058 C0
*	10,0	18,0	5,8	6,3	3,5	RSD 0100 0180 058 C0
	12,0	19,0	5,0	5,6	3,5	RSD 0120 0190 050 C0
*	12,0	20,0	5,8	6,3	4,5	RSD 0120 0200 058 C0
	14,0	21,0	5,0	5,6	4,0	RSD 0140 0210 050 C0
	14,0	22,0	5,8	6,3	4,5	RSD 0140 0220 058 C0
	15,0	23,0	6,0	7,0	4,5	RSD 0150 0230 060 C0
	16,0	22,0	5,0	5,6	3,5	RSD 0160 0220 050 C0
*	16,0	24,0	5,8	6,3	4,5	RSD 0160 0240 058 C0
	18,0	22,0	4,0	4,5	3,0	RSD 0180 0220 040 C0
	18,0	25,0	5,0	5,7	4,0	RSD 0180 0250 050 C0
*	18,0	26,0	5,8	6,3	4,5	RSD 0180 0260 058 C0
	18,0	26,0	8,0	9,0	4,5	RSD 0180 0260 080 C0
	20,0	26,0	5,2	6,0	3,5	RSD 0200 0260 052 C0
*	20,0	28,0	5,8	6,3	4,5	RSD 0200 0280 058 C0
*	20,0	30,0	7,0	8,0	5,0	RSD 0200 0300 070 C0
	22,0	28,0	4,5	5,5	3,5	RSD 0220 0280 045 C0
	22,0	28,0	5,8	6,3	3,5	RSD 0220 0280 058 C0
	22,0	29,0	5,0	5,6	4,0	RSD 0220 0290 050 C0
*	22,0	30,0	5,8	6,3	4,5	RSD 0220 0300 058 C0
	24,0	32,0	5,8	6,3	4,5	RSD 0240 0320 058 C0
	25,0	31,0	5,0	5,6	3,5	RSD 0250 0310 050 C0
*	25,0	33,0	5,8	6,3	4,5	RSD 0250 0330 058 C0
	25,0	33,0	6,5	7,5	4,5	RSD 0250 0330 065 C0
	25,0	33,0	7,0	8,0	4,5	RSD 0250 0330 070 C0

	d_{h9}	D_{H10}	h	$E_{+0,2}$	C	ART.NR. / *ITEM*
*	25,0	35,0	7,0	8,0	5,0	RSD 0250 0350 070 C0
	25,0	35,0	8,0	9,0	5,0	RSD 0250 0350 080 C0
*	28,0	36,0	5,8	6,3	4,5	RSD 0280 0360 058 C0
*	28,0	38,0	5,8	6,3	5,0	RSD 0280 0380 058 C0
*	28,0	38,0	7,0	8,0	5,0	RSD 0280 0380 070 C0
	30,0	38,0	5,8	6,3	4,5	RSD 0300 0380 058 C0
	30,0	38,0	7,0	8,0	4,5	RSD 0300 0380 070 C0
	30,0	38,0	8,0	9,0	4,5	RSD 0300 0380 080 C0
	30,0	40,0	6,5	7,5	5,0	RSD 0300 0400 065 C0
	30,0	40,0	10,0	11,0	5,0	RSD 0300 0400 100 C0
	32,0	40,0	5,8	6,3	4,5	RSD 0320 0400 058 C0
	32,0	40,0	6,0	7,0	4,5	RSD 0320 0400 060 C0
	32,0	40,0	8,0	9,0	4,5	RSD 0320 0400 080 C0
*	32,0	42,0	7,0	8,0	4,5	RSD 0320 0420 070 C0
	32,0	42,0	8,0	9,0	5,0	RSD 0320 0420 080 C0
	32,0	42,0	10,0	11,0	5,0	RSD 0320 0420 100 C0
	32,0	45,0	8,0	9,0	7,0	RSD 0320 0450 080 CO
	35,0	43,0	5,8	6,3	4,5	RSD 0350 0430 058 C0
	35,0	43,0	6,0	7,0	4,5	RSD 0350 0430 060 C0
	35,0	43,0	8,0	9,0	4,5	RSD 0350 0430 080 C0
	35,0	45,0	7,0	8,0	5,0	RSD 0350 0450 070 C0
	35,0	45,0	10,0	11,0	5,0	RSD 0350 0450 100 C0
*	36,0	44,0	5,8	6,3	4,5	RSD 0360 0440 058 C0
	36,0	44,0	8,0	9,0	4,5	RSD 0360 0440 080 C0
	40,0	48,0	5,8	6,3	4,5	RSD 0400 0480 058 C0
	40,0	48,0	8,0	9,0	4,5	RSD 0400 0480 080 C0
*	40,0	50,0	7,0	8,0	5,0	RSD 0400 0500 070 C0

* i enlighet med normerna ISO/DIN 5597 och ISO 5597/1
– in accordance with ISO/DIN 5597 and ISO 5597/1 norms

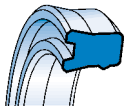

RSD

	d_{h9}	D_{H10}	h	$E_{+0,2}$	C	ART.NR. / *ITEM*
	40,0	50,0	10,0	11,0	5,0	RSD 0400 0500 100 C0
	40,0	55,0	10,0	11,0	6,5	RSD 0400 0550 100 C0
	42,0	50,0	6,0	7,0	4,5	RSD 0420 0500 060 C0
	42,0	52,0	8,0	9,0	5,0	RSD 0420 0520 080 C0
*	45,0	53,0	5,8	6,3	4,5	RSD 0450 0530 058 C0
	45,0	53,0	8,0	9,0	4,5	RSD 0450 0530 080 C0
	45,0	53,0	10,0	11,0	4,5	RSD 0450 0530 100 CO
*	45,0	55,0	5,7	6,3	5,0	RSD 0450 0550 057 C0
*	45,0	55,0	7,0	8,0	5,0	RSD 0450 0550 070 C0
	45,0	55,0	10,0	11,0	5,0	RSD 0450 0550 100 C0
	46,0	54,0	8,0	9,0	4,5	RSD 0460 0540 080 C0
	50,0	58,0	8,0	9,0	4,5	RSD 0500 0580 080 C0
*	50,0	60,0	7,0	8,0	5,0	RSD 0500 0600 070 C0
	50,0	60,0	9,0	10,0	5,0	RSD 0500 0600 090 C0
	50,0	60,0	10,0	11,0	5,0	RSD 0500 0600 100 C0
	50,0	65,0	8,0	9,0	6,5	RSD 0500 0650 080 CO
	50,0	65,0	10,0	11,0	6,5	RSD 0500 0650 100 C0
	55,0	63,0	8,0	9,0	4,5	RSD 0550 0630 080 C0
	55,0	65,0	7,0	8,0	5,0	RSD 0550 0650 070 C0
	55,0	65,0	10,0	11,0	5,0	RSD 0550 0650 100 C0
	56,0	64,0	8,0	9,0	4,5	RSD 0560 0640 080 C0
	56,0	66,0	6,5	7,5	5,0	RSD 0560 0660 065 C0
*	56,0	71,0	11,5	12,5	6,5	RSD 0560 0710 115 C0
	60,0	68,0	8,0	9,0	4,5	RSD 0600 0680 080 C0
	60,0	70,0	7,0	8,0	5,5	RSD 0600 0700 070 C0
	60,0	70,0	7,5	8,5	5,5	RSD 0600 0700 075 C0
	60,0	70,0	10,0	11,0	5,5	RSD 0600 0700 100 C0
	60,0	70,0	12,0	13,0	5,5	RSD 0600 0700 120 C0
	60,0	72,0	9,0	10,0	6,0	RSD 0600 0720 090 C0
	61,0	69,0	8,0	9,0	4,5	RSD 0610 0690 080 C0
	63,0	71,0	8,0	9,0	4,5	RSD 0630 0710 080 C0
	65,0	73,0	8,0	9,0	4,5	RSD 0650 0730 080 C0
	65,0	75,0	12,0	13,0	5,0	RSD 0650 0750 120 CO
	65,0	77,0	9,0	10,0	6,0	RSD 0650 0770 090 C0
	68,0	76,0	8,0	9,0	4,5	RSD 0680 0760 080 C0
	70,0	78,0	8,0	9,0	4,5	RSD 0700 0780 080 C0
*	70,0	80,0	6,5	7,5	5,5	RSD 0700 0800 065 C0
	70,0	80,0	7,0	8,0	5,0	RSD 0700 0800 070 CO
	70,0	80,0	12,0	13,0	5,5	RSD 0700 0800 120 C0
	70,0	82,0	9,5	10,5	6,0	RSD 0700 0820 095 C0
*	70,0	85,0	11,5	12,5	6,5	RSD 0700 0850 115 C0
	75,0	83,0	8,0	9,0	4,5	RSD 0750 0830 080 C0
	75,0	85,0	7,0	8,0	5,5	RSD 0750 0850 070 C0
	75,0	85,0	12,0	13,0	5,5	RSD 0750 0850 120 C0
	76,0	84,0	8,0	9,0	4,5	RSD 0760 0840 080 C0

	d_{h9}	D_{H10}	h	$E_{+0,2}$	C	ART.NR. / *ITEM*
	76,0	86,0	8,0	9,0	5,0	RSD 0760 0860 080 CO
	78,0	86,0	8,0	9,0	4,5	RSD 0780 0860 080 C0
	80,0	88,0	8,0	9,0	4,5	RSD 0800 0880 080 C0
	80,0	90,0	12,0	13,0	5,0	RSD 0800 0900 120 CO
	80,0	92,0	9,0	10,0	6,0	RSD 0800 0920 090 C0
*	80,0	95,0	11,5	12,5	6,5	RSD 0800 0950 115 C0
	85,0	93,0	8,0	9,0	4,5	RSD 0850 0930 080 C0
	85,0	95,0	12,0	13,0	5,5	RSD 0850 0950 120 C0
	90,0	98,0	8,0	9,0	4,5	RSD 0900 0980 080 C0
*	90,0	100,0	6,5	7,5	5,5	RSD 0900 1000 065 C0
*	90,0	105,0	11,5	12,5	6,5	RSD 0900 1050 115 C0
	91,0	99,0	8,0	9,0	4,5	RSD 0910 0990 080 C0
	95,0	103,0	8,0	9,0	4,5	RSD 0950 1030 080 C0
	100,0	108,0	6,5	7,5	4,5	RSD 1000 1080 065 C0
	100,0	108,0	8,0	9,0	4,5	RSD 1000 1080 080 C0
	105,0	113,0	8,0	9,0	4,5	RSD 1050 1130 080 C0
	107,0	115,0	8,0	9,0	4,5	RSD 1070 1150 080 C0
	108,0	116,0	8,0	9,0	4,5	RSD 1080 1160 080 C0
*	110,0	125,0	9,5	10,5	6,5	RSD 1100 1250 095 C0
	110,0	125,0	11,0	12,0	6,5	RSD 1100 1250 110 CO
	115,0	123,0	8,0	9,0	4,5	RSD 1150 1230 080 C0
	115,0	130,0	11,3	12,0	6,5	RSD 1150 1300 113 C0
	120,0	128,0	11,5	12,5	4,5	RSD 1200 1280 115 CO
	120,0	135,0	15,0	16,0	6,5	RSD 1200 1350 150 C0
	125,0	133,0	8,0	9,0	4,5	RSD 1250 1330 080 C0
	126,0	134,0	8,0	9,0	4,5	RSD 1260 1340 080 C0
	130,0	145,0	15,0	16,0	6,5	RSD 1300 1450 150 C0
	135,0	143,0	8,0	9,0	4,5	RSD 1350 1430 080 C0
	135,0	150,0	11,5	12,5	6,5	RSD 1350 1500 115 CO
	140,0	150,0	11,5	12,5	5,0	RSD 1400 1500 115 CO
	145,0	153,0	8,0	9,0	4,5	RSD 1450 1530 080 C0

OBS: Kontakta vår tekniska avdelning för dimensioner som inte finns i katalogen.
Remark: please contact our technical dept. for further dimensions not included in the catalogue.

* i enlighet med normerna ISO/DIN 5597 och ISO 5597/1
– in accordance with ISO/DIN 5597 and ISO 5597/1 norms

RSD

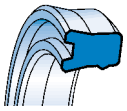

RSA
RSB
RSB2
RSC
RSD
TSS
RSO
RBR
RPS

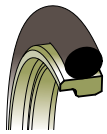

TSS

KOLVSTÅNGSTÄTNING TYP TSS

Beskrivning

Kolvstångstätning typ TSS består av två ringar. Den dynamiska tätningen är en fylld PTFE medan den statiska tätningen är en O-ring som också fungerar som en förspänning.

Tekniska data

Tryck:	<600 bar
Hastighet:	<15 m/s
Temperatur:	från -30 °C upp till +100 °C för standardtypen med O-ringar av nitril. Kortvariga toppar upp till 120 °C. För andra temperaturer bör O-ringen bytas till en mer lämplig modell.

Material

Bronsfylld PTFE för standardtypen, och O-Ring i NBR (nitrilbutadiengummi).
Materialreferens: TN

Montage

Tätningar typ PTFE kräver noggrann montering jämfört med andra typer av tätningar. Det är viktigt att avlägsna grader och vassa kanter i spåren. Kolvstångstätningen monteras vanligtvis i följande ordning:

- passa in O-ringen i spåret;
- forma PTFE-ringen med hjälp av ett dorn och en expansionsbussning;
- kalibrera med hjälp av ett koniskt plastverktyg (se sida 27, figur 9).

TSS TYPE ROD SEAL

Description

The TSS rod seal is composed of two rings. The dynamic seal is a ring in filled PTFE while the static seal is an O-Ring also acting as energizer.

Technical data

Pressure:	*<600 bar*
Speed:	*<15 m/s*
Temperature:	*from - 30 °C up to + 100 °C for the standard type with nitrile OR. Short peaks till 120 °C. For a different temperature range, the O-Ring should be replaced by a more suitable model*

Material

Bronze-filled PTFE for the standard type, and is NBR (Nitrile butadiene rubber) O-Ring.
Compound reference: TN

Assembly

PTFE seals require careful assembly operations in comparison to other types of seals It is necessary to remove flashes and/or cutting edges in the grooves. The rod seal is usually assembled in the following sequence:

- *fit the O-Ring into the groove*
- *twist the PTFE ring using a mandrel and a expansion bush;*
- *calibrate with a plastic conical tool (Page 27 Fig.9)*

TSS

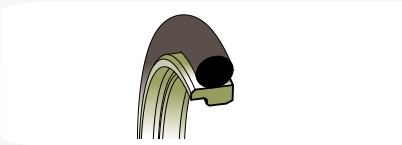

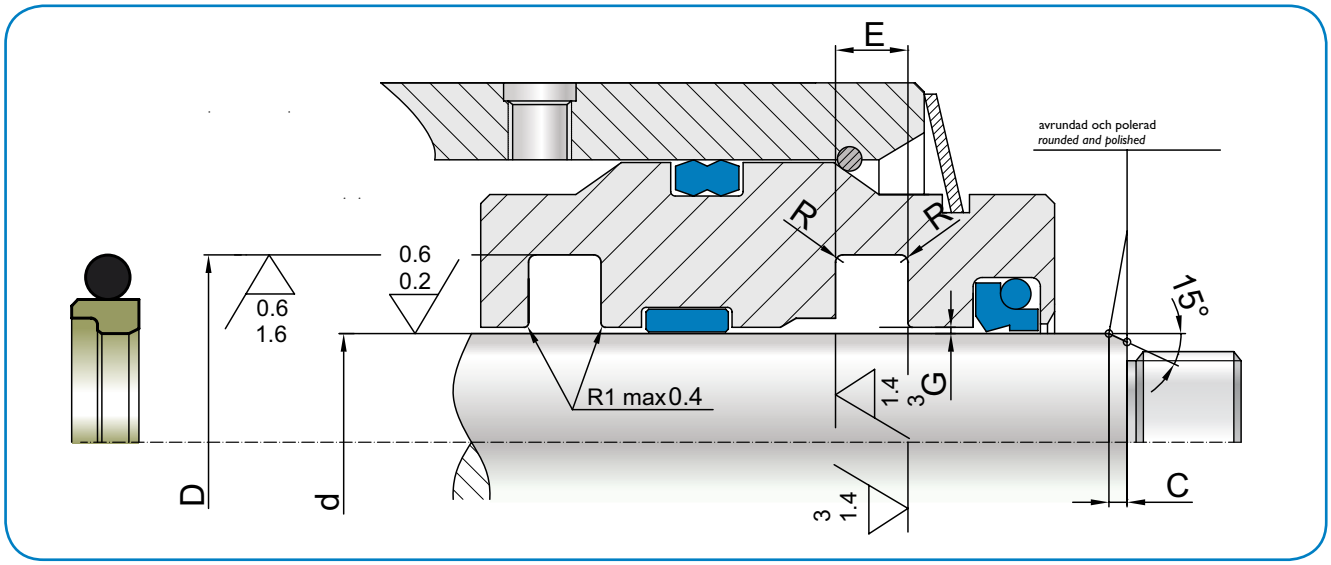

RSA
RSB
RSB2
RSC
RSD
TSS
RSO
RBR
RPS

d_{h9}	D_{H9}	$E_{+0,2}$	O-R	C	ART.NR. / ITEM
4,0	8,9	2,20	010	5,0	TSS 0040 0089 022 TN
5,0	9,9	2,20	010	5,0	TSS 0050 099 022 TN
7,0	11,9	2,20	012	5,0	TSS 0070 0119 022 TN
8,0	15,3	3,20	111	5,0	TSS 0080 0153 032 TN
10,0	17,3	3,20	112	5,0	TSS 0100 0173 032 TN
12,0	19,3	3,20	114	5,0	TSS 0120 0193 032 TN
14,0	21,3	3,20	115	5,0	TSS 0140 0213 032 TN
15,0	22,3	3,20	116	5,0	TSS 0150 0223 032 TN
16,0	23,3	3,20	116	5,0	TSS 0160 0233 032 TN
18,0	25,3	3,20	117	5,0	TSS 0180 0253 032 TN
20,0	30,7	4,20	214	5,0	TSS 0200 0307 042 TN
22,0	32,7	4,20	215	5,0	TSS 0220 0327 042 TN
24,0	34,7	4,20	216	5,0	TSS 0240 0347 042 TN
25,0	35,7	4,20	217	5,0	TSS 0250 0357 042 TN
26,0	36,7	4,20	218	5,0	TSS 0260 0367 042 TN
28,0	38,7	4,20	219	5,0	TSS 0280 0387 042 TN
30,0	40,7	4,20	220	5,0	TSS 0300 0407 042 TN
32,0	42,7	4,20	221	5,0	TSS 0320 0427 042 TN
35,0	45,7	4,20	222	5,0	TSS 0350 0457 042 TN
37,0	47,7	4,20	223	5,0	TSS 0370 0477 042 TN
38,0	53,1	6,30	327	5,0	TSS 0380 0531 063 TN
40,0	55,1	6,30	328	5,0	TSS 0400 0551 063 TN
42,0	57,1	6,30	328	5,0	TSS 0420 0571 063 TN
45,0	60,1	6,30	329	5,0	TSS 0450 0601 063 TN
48,0	63,1	6,30	330	5,0	TSS 0480 0631 063 TN
50,0	65,1	6,30	331	5,0	TSS 0500 0651 063 TN
52,0	67,1	6,30	331	5,0	TSS 0520 0671 063 TN
55,0	70,1	6,30	332	5,0	TSS 0550 0701 063 TN
58,0	73,1	6,30	333	5,0	TSS 0580 0731 063 TN
60,0	75,1	6,30	334	5,0	TSS 0600 0751 063 TN

d_{h9}	D_{H9}	$E_{+0,2}$	O-R	C	ART.NR. / ITEM
65,0	80,1	6,30	335	5,0	TSS 0650 0801 063 TN
70,0	85,1	6,30	337	5,0	TSS 0700 0851 063 TN
75,0	90,1	6,30	339	5,0	TSS 0750 0901 063 TN
80,0	95,1	6,30	340	5,0	TSS 0800 0951 063 TN
85,0	100,1	6,30	342	5,0	TSS 0850 1001 063 TN
90,0	105,1	6,30	343	5,0	TSS 0900 1051 063 TN
95,0	110,1	6,30	345	7,0	TSS 0950 1101 063 TN
100,0	115,1	6,30	346	7,0	TSS 1000 1151 063 TN
110,0	125,1	6,30	350	7,0	TSS 1100 1251 063 TN
120,0	135,1	6,30	353	7,0	TSS 1200 1351 063 TN
125,0	140,1	6,30	354	7,0	TSS 1250 1401 063 TN
130,0	145,1	6,30	356	7,0	TSS 1300 1451 063 TN
140,0	155,1	6,30	359	7,0	TSS 1400 1551 063 TN
150,0	165,1	6,30	361	7,0	TSS 1500 1651 063 TN
155,0	170,1	6,30	362	7,0	TSS 1550 1701 063 TN
160,0	175,1	6,30	363	7,0	TSS 1600 1751 063 TN
170,0	185,1	6,30	365	7,0	TSS 1700 1851 063 TN
175,0	190,1	6,30	366	7,0	TSS 1750 1901 063 TN
180,0	195,1	6,30	366	7,0	TSS 1800 1951 063 TN
185,0	200,1	6,30	367	7,0	TSS 1850 2001 063 TN
190,0	205,1	6,30	368	7,0	TSS 1900 2051 063 TN
195,0	210,1	6,30	368	7,0	TSS 1950 2101 063 TN
200,0	220,5	8,10	445	10,0	TSS 2000 2205 081 TN
210,0	230,5	8,10	446	10,0	TSS 2100 2305 081 TN
220,0	240,5	8,10	447	10,0	TSS 2200 2405 081 TN
225,0	245,5	8,10	447	10,0	TSS 2250 2455 081 TN
230,0	250,5	8,10	448	10,0	TSS 2300 2505 081 TN
240,0	260,5	8,10	448	10,0	TSS 2400 2605 081 TN
250,0	270,5	8,10	449	10,0	TSS 2500 2705 081 TN

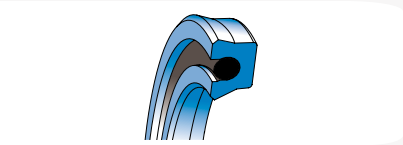

RSO

KOLVSTÅNGSTÄTNING TYP RSO

Beskrivning

Tätning typ RSO har utvecklats för att ersätta eller samverka med glidhylstätningar av PTFE med samma spårdimensioner.
Den har ett inre runt spår där en O-ring kan införas. O-ringen fungerar som en förspänning för både den statiska och den dynamiska tätningsläppen även vid avsaknad av tryck.
Den här profilen har utmärkta egenskaper vid mycket låga hastigheter och tryck på grund av den låga friktionen.
Bearbetningen av spåret är lättare tack vare den reducerade axiella dimensionen.

Tekniska data

Tryck:	<250 bar vid 60 °C
Hastighet:	<0,5 m/s
Temperatur:	från -35 °C till +100 °C med toppar upp till 110 °C
Vätskor:	mineraloljor (se tabell 1 på sida 12)

Material

Det föreslagna materialet är polyuretan typ C0, med hög elasticitetsfaktor, lågt sättningsvärde och hög slitstyrka.
Hårdheten är 93 Shore A±2.
Materialreferens: CN (•)

Montage

Som för alla tätningshöljen, avlägsna grader och vassa kanter.
För mer information se installationsanvisningarna på sida 26.

RSO TYPE ROD SEAL

Description

The RSO seal type has been developed to replace or work jointly with stepseals in PTFE, because of the same groove dimension.
Internally it has a round groove where an O-ring can be inserted and housed. The O-Ring acts as energizer for the static and dynamic sealing lips even without pressure.
This profile has also excellent results at very low speed and pressure, because of the low friction.
The machining of the groove is easier thanks to the reduced axial dimension.

Technical data

Pressure:	*<250 bar at a temperature of 60 °C*
Speed:	*<0.5 m/s*
Temperature:	*from - 35 °C to + 100 °C, with peaks till 110 °C*
Fluids:	*mineral oils (see TABLE I, pages 12-13) (see table 1, page 12)*

Material

The proposed material is a "C0" type polyurethane, with high elasticity modulus, low compression-set and high abrasion resistance.
The hardness is 93 Shore A ± 2, energized with O-ring in NBR 70 (N0).
Compound reference: CN (•)

Assembly

As for all seal housings, remove any flash or cutting edges.
For further information please refer to the installation instructions on page 26.

RSO

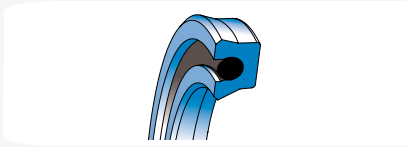

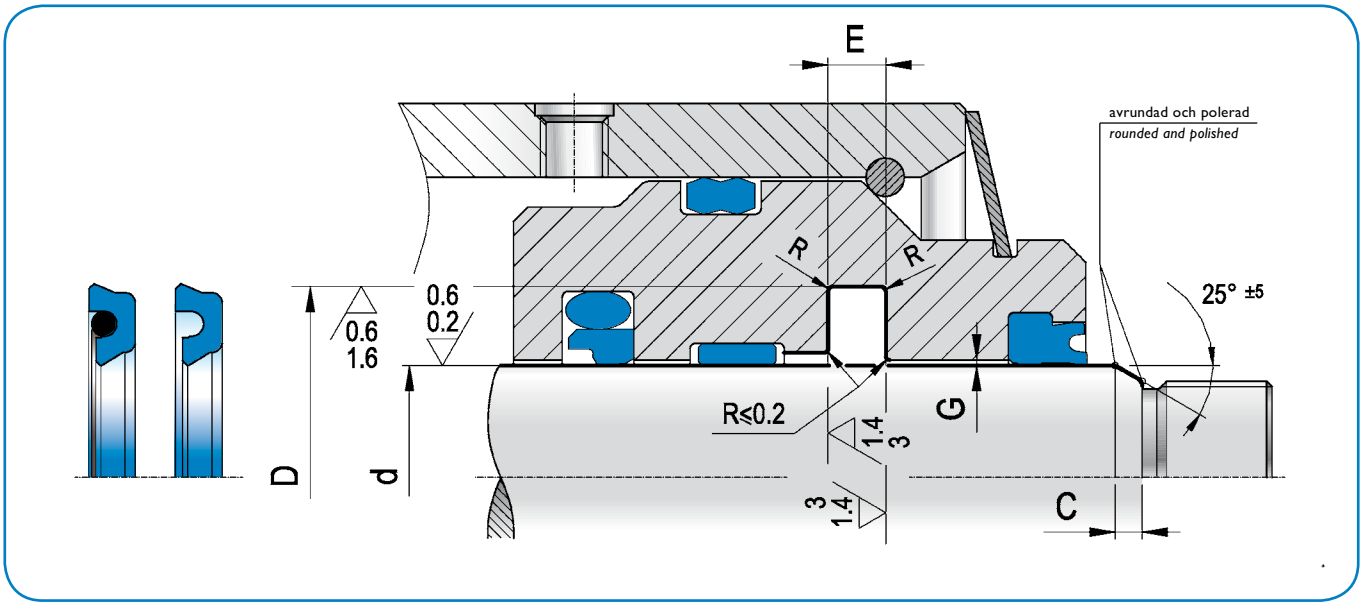

RSA
RSB
RSB2
RSC
RSD
TSS
RSO
RBR
RPS

	d_{h9}	D_{H10}	$E_{+0,2}$	R	C	O-ring	ART.NR. / *ITEM*
*	12,0(1)	19,5	3,2	0,5	3,0	-	RSO 0120 0195 032 C0
*	14,0(1)	21,5	3,2	0,5	3,0	-	RSO 0140 0215 032 C0
*	16,0(1)	23,5	3,2	0,5	3,0	-	RSO 0160 0235 032 C0
*	18,0(1)	25,5	3,2	0,5	3,0	-	RSO 0180 0255 032 C0
*	20,0(1)	27,5	3,2	0,5	3,0	-	RSO 0200 0275 032 C0
*	20,0(2)	31,0	4,2	0,5	4,0	OR 119	RSO 0200 0310 042 CN
*	22,0(1)	29,5	3,2	0,5	3,0	-	RSO 0220 0295 032 C0
*	22,0(2)	33,0	4,2	0,5	4,0	OR 120	RSO 0220 0330 042 CN
*	25,0(1)	32,5	3,2	0,5	3,0	-	RSO 0250 0325 032 C0
*	25,0(2)	36,0	4,2	0,5	4,0	OR 122	RSO 0250 0360 042 CN
*	26,5(1)	34,0	3,2	0,5	3,0	-	RSO 0265 0340 032 C0
*	28,0(2)	39,0	4,2	0,5	4,0	OR 124	RSO 0280 0390 042 CN
*	32,0(2)	43,0	4,2	0,5	4,0	OR 127	RSO 0320 0430 042 CN
*	36,0(2)	47,0	4,2	0,5	4,0	OR 129	RSO 0360 0470 042 CN
*	40,0(2)	51,0	4,2	0,5	4,0	OR 132	RSO 0400 0510 042 CN
*	40,0	55,5	6,3	0,9	5,0	OR 224	RSO 0400 0555 063 CN
*	45,0	56,0	4,2	0,5	4,0	OR 135	RSO 0450 0560 042 CN
	45,0	60,5	6,3	0,9	5,0	OR 226	RSO 0450 0605 063 CN
*	50,0	61,0	4,2	0,5	4,0	OR 138	RSO 0500 0610 042 CN
	50,0	65,5	6,3	0,9	5,0	OR 227	RSO 0500 0655 063 CN
	55,0	66,0	4,2	0,5	4,0	OR 141	RSO 0550 0660 042 CN
	55,0	70,5	6,3	0,5	4,0	OR 229	RSO 0550 0705 063 CN
*	56,0	67,0	4,2	0,5	4,0	OR 142	RSO 0560 0670 042 CN
*	56,0	71,5	6,3	0,9	5,0	OR 229	RSO 0560 0715 063 CN
*	63,0	74,0	4,2	0,5	4,0	OR 146	RSO 0630 0740 042 CN
*	63,0	78,5	6,3	0,9	5,0	OR 231	RSO 0630 0785 063 CN
	65,0	80,5	6,3	0,9	5,0	OR 232	RSO 0650 0805 063 CN

	d_{h9}	D_{H10}	$E_{+0,2}$	R	C	O-ring	ART.NR. / *ITEM*
*	70,0	85,5	6,3	0,9	5,0	OR 234	RSO 0700 0855 063 CN
	75,0	86,0	4,2	0,5	4,0	OR 152	RSO 0750 0860 042 CN
	75,0	90,5	6,3	0,9	5,0	OR 236	RSO 0750 0905 063 CN
*	80,0	95,5	6,3	0,9	5,0	OR 237	RSO 0800 0955 063 CN
*	90,0	105,5	6,3	0,9	5,0	OR 240	RSO 0900 1055 063 CN
	95,0	110,5	6,3	0,9	5,0	OR 242	RSO 0950 1105 063 CN
*	100,0	115,5	6,3	0,9	5,0	OR 243	RSO 1000 1155 063 CN
	105,0	120,5	6,3	0,9	5,0	OR 245	RSO 1050 1205 063 CN
	110,0	125,5	6,3	0,9	5,0	OR 246	RSO 1100 1255 063 CN
	115,0	130,5	6,3	0,9	5,0	OR 248	RSO 1150 1305 063 CN
	120,0	135,5	6,3	0,9	5,0	OR 250	RSO 1200 1355 063 CN
	130,0	145,5	6,3	0,9	5,0	OR 253	RSO 1300 1455 063 CN
	135,0	150,5	6,3	0,9	5,0	OR 255	RSO 1350 1505 063 CN
*	140,0	155,5	6,3	0,9	5,0	OR 256	RSO 1400 1555 063 CN
	145,0	160,5	6,3	0,9	5,0	OR 258	RSO 1450 1605 063 CN
	150,0	165,5	6,3	0,9	5,0	OR 259	RSO 1500 1655 063 CN
*	160,0	175,5	6,3	0,9	5,0	OR 260	RSO 1600 1755 063 CN
*	160,0	181,0	8,1	0,9	7,0	OR 363	RSO 1600 1810 081 CN
*	180,0	195,5	6,3	0,9	5,0	OR 263	RSO 1800 1955 063 CN
	190,0	205,5	6,3	0,9	5,0	OR 265	RSO 1900 2055 063 CN
	200,0	215,5	6,3	0,9	5,0	OR 267	RSO 2000 2155 063 CN
*	200,0	221,0	8,1	0,9	7,0	OR 370	RSO 2000 2210 081 CN

* i enlighet med normerna ISO/DIN 5597 och ISO 5597/1
– in accordance with ISO/DIN 5597 and ISO 5597/1 norms

(1) = RSO med tvärsnitt 3,75 mm levereras utan O-ring
– for cross section 3.75mm RSO is supplied without O-ring
(2) = öppet spårhölje rekommenderas för enklare montage
– open groove housing is recommended for easier installation

RBR

BUFFERRING TYP RBR

Beskrivning

Bufferringen RBR är speciellt utformad för att fungera som huvudtätning och användas i kombination med asymetriska tätningsläpptätningar (se RSA, sida 28). Dess funktion är att upprätthålla arbetstrycket för den sekundära tätningen. Den ger inte full tätning vilket gör att en oljekammare formas mellan de två tätningarna. Tack vare RBR-ringens speciella profil kommer det växande trycket i utrymmet stätningsläppas in i cylindern när ett visst värde uppnås. Den fungerar som en ventil.
Den har även utformats för att kompensera för trycktoppar.

Tekniska data

Tryck:	<400 bar vid 60 °C
Hastighet:	<0,8 m/s
Temperatur:	från -35 °C till +100 °C med toppar upp till 110 °C
Vätskor:	mineralolja HL och HLP (se tabell 1 på sida 12)

Material

Det föreslagna materialet är polyuretan typ C0, med hög elasticitetsfaktor, lågt sättningsvärde och hög slitstyrka.
Hårdheten är 93 Shore A±2.
För anti-extrusionsring föreslår vi polyacetalharts (R0) med hög draghållfasthet.
Materialreferens: CR

Montage

Montage sker i ett slutet spår. Polyuretantätningen måste därför monteras före anti-extrusionsringen.

RBR TYPE BUFFER RING

Description

The RBR ring, working as buffer ring, has been specially designed to work as main seal, to be used in combination with asymmetrical lip seals (see RSA, page 30).
Its function is to maintain working pressure for the second seal. It does not provide full sealing effect so an oil chamber will thus form between the two seals.
Thanks to the special profile of the RBR ring, the growing pressure in the space will be released into the cylinder once a certain value is achieved. It works as a valve.
It has been also designed to compensate pressure peaks.

Technical data

Pressure:	*<400 bar at a temperature of 60 °C*
Speed:	*<0.8 m/s*
Temperature:	*from - 35 °C to + 100 °C with peaks till 110 °C*
Fluids:	*HL and HLP mineral oil (see table 1, page 12)*

Material

The proposed material is a "C0" type polyurethane, with high elasticity modulus, fundamental for the sealing, low compression-set and high abrasion resistance.
The hardness is 93 Shore A ± 2.
For the anti-extrusion ring we propose a polyacetalic resin (R0) with high tensile strength.
Compound reference: CR

Assembly

The assembly is done in closed groove. The polyurethane seal must therefore be fitted before the anti-extrusion ring.

RBR

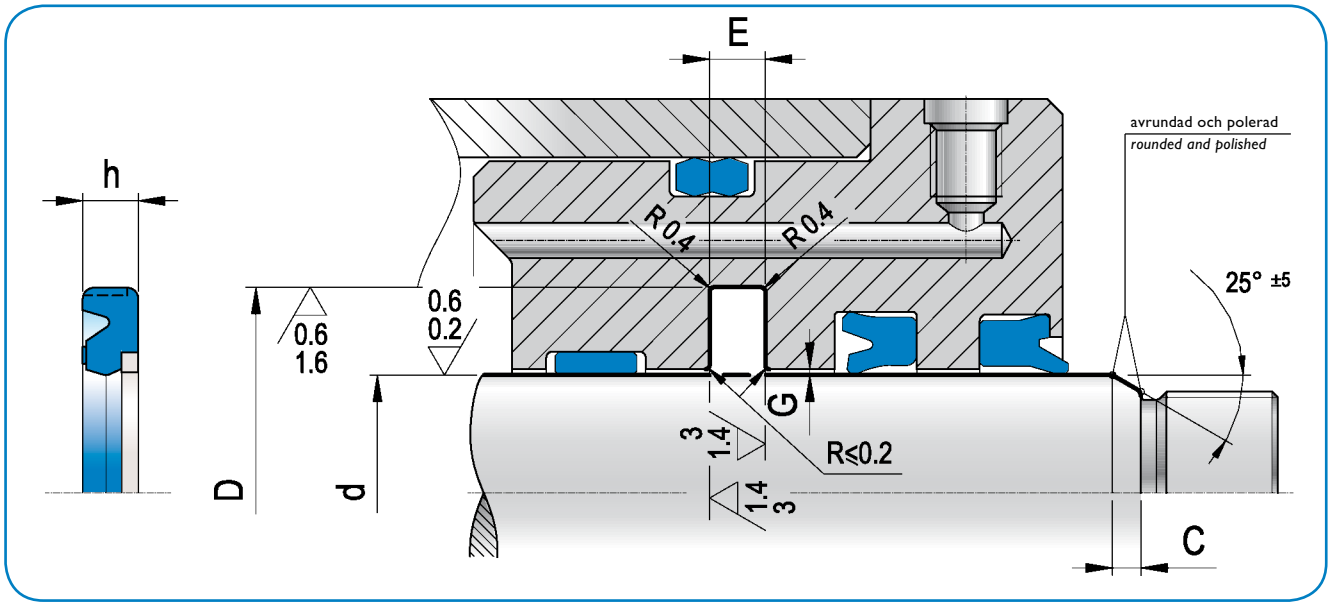

RSA
RSB
RSB2
RSC
RSD
TSS
RSO
RBR
RPS

d_{h9}	D_{H10}	h	$E_{+0,2}$	C	ART.NR. / *ITEM*
45,0	60,5	5,9	6,3	5,5	RBR 0450 0605 063 CR
50,0	65,5	5,9	6,3	5,5	RBR 0500 0655 063 CR
55,0	70,5	5,9	6,3	5,5	RBR 0550 0705 063 CR
56,0	71,5	5,9	6,3	5,5	RBR 0560 0715 063 CR
60,0	75,5	5,9	6,3	5,5	RBR 0600 0755 063 CR
65,0	80,5	5,9	6,3	5,5	RBR 0650 0805 063 CR
63,0	78,5	5,9	6,3	5,5	RBR 0630 0785 063 CR
70,0	85,5	5,9	6,3	6,0	RBR 0700 0855 063 CR
75,0	90,5	5,9	6,3	6,0	RBR 0750 0905 063 CR
80,0	95,5	5,9	6,3	6,0	RBR 0800 0955 063 CR
85,0	100,5	5,9	6,3	6,0	RBR 0850 1005 063 CR
90,0	105,5	5,9	6,3	6,0	RBR 0900 1055 063 CR

d_{h9}	D_{H10}	h	$E_{+0,2}$	C	ART.NR. / *ITEM*
95,0	110,5	5,9	6,3	6,0	RBR 0950 1105 063 CR
100,0	115,5	5,9	6,3	6,0	RBR 1000 1155 063 CR
105,0	120,5	5,9	6,3	6,0	RBR 1050 1205 063 CR
110,0	125,5	5,9	6,3	6,0	RBR 1100 1255 063 CR
115,0	130,5	5,9	6,3	6,0	RBR 1150 1305 063 CR
120,0	135,5	5,9	6,3	6,0	RBR 1200 1355 063 CR
125,0	140,5	5,9	6,3	6,0	RBR 1250 1405 063 CR
150,0	165,5	5,9	6,3	6,0	RBR 1500 1655 063 CR
170,0	185,5	5,9	6,3	6,0	RBR 1700 1855 063 CR
180,0	195,5	5,9	6,3	6,0	RBR 1800 1955 063 CR
200,0	220,5	7,6	8,1	7,5	RBR 2000 2205 081 CR

CR = CO (TPU 93 shore A) + RO (POM)

OBS: Kontakta vår tekniska avdelning för dimensioner som inte finns i katalogen.
Remark: please contact our technical dept. for further dimensions not included in the catalogue.

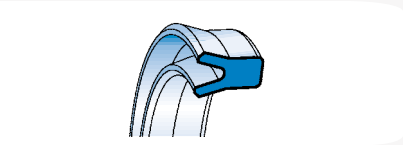

RPS

KOLVSTÅNGS-/KOLVTÄTNING TYP RPS

Beskrivning

Tätning typ RPS kombinerar i en lösning två olika installationer och applikationer.
Med två symmetriska tätningsläppar kan den användas till både kolvstångs- och kolvtätningar, både enkel- och dubbelverkande. Profilen med lika stora tätningsläppar och med ett djupt spår säkerställer låg friktion och en linjär rörelse även vid lågt tryck.

Tekniska data

Tryck:	<400 bar vid 60 °C
Hastighet:	<0,5 m/s
Temperatur:	från -35 °C till +100 °C med toppar upp till 110 °C
Vätskor:	hydraulmineraloljor (se tabell 1 på sida 12)

Material

Det föreslagna materialet är polyuretan typ C0, med hög elasticitetsfaktor, lågt sättningsvärde och hög slitstyrka.
Hårdheten är 93 Shore A±2.
Materialreferens: C0

Montage

Polyuretanets höga elasticitetsfaktor underlättar montage.
Vi rekommenderar smörjning av tätningen före montage och att avlägsna grader och vassa kanter som kan skada tätningen.

RPS TYPE ROD/PISTON SEAL

Description

The RPS seal type combines in one solution two different installations and applications.
With two symmetrical lips, it can be used both for rod and piston sealing applications and for cylinders working with simple or double effect.
The profile with equal lips and the deep groove ensures low friction and a linear movement even at low pressure.

Technical data

Pressure:	*<400 bar at a temperature of 60 °C*
Speed:	*<0,5 m/s*
Temperature:	*from - 35 °C to + 100 °C, with peaks till +110 °C*
Fluids:	*mineral hydraulic oils (see table 1, page 12)*

Material

The proposed material is a "C0" type polyurethane, with high elasticity modulus, fundamental for the sealing, low compression-set and high abrasion resistance.
The hardness is 93 Shore A ± 2.
Compound reference: C0

Assembly

The high modulus of elasticity of the polyurethane helps the assembly.
It is recommended to lubricate the seals before installation and to eliminate any edges or flash which could damage the seal.

RPS

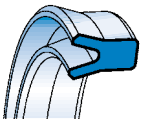

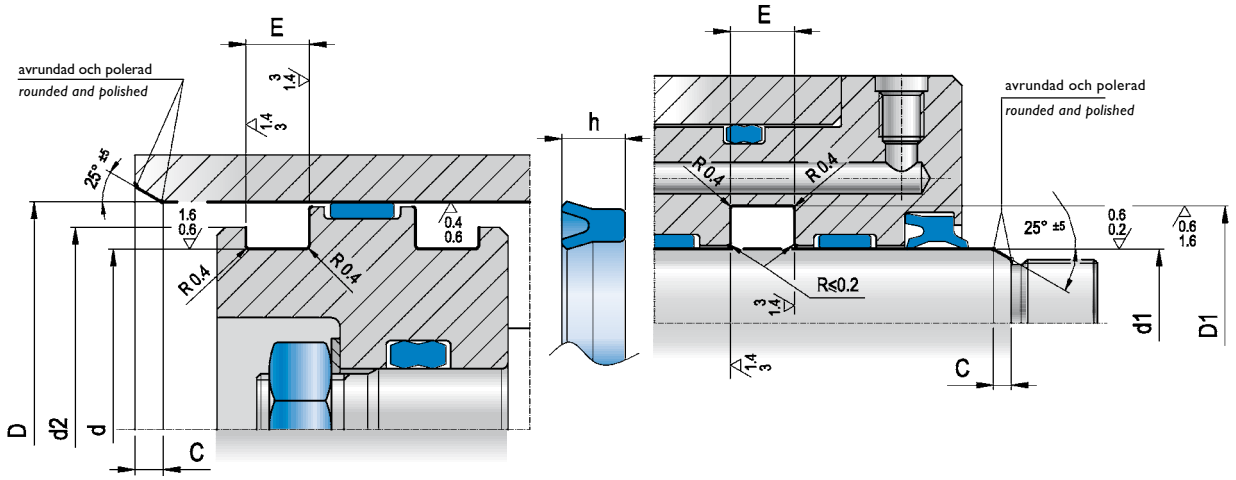

RSA
RSB
RSB2
RSC
RSD
TSS
RSO
RBR
RPS

d_{h11} d_{1h9}	D_{H9} D_{1H10}	h	$E_{+0,2}$	d_2**	C	ART.NR. / *ITEM*
4,0	8,0	3,5	4,0	6,0	2,0	RPS 0040 0080 035 CO
4,0	10,0	4,0	4,5	7,0	3,0	RPS 0040 0100 040 CO
5,0	12,0	4,5	5,0	8,5	3,0	RPS 0050 0120 045 C0
5,0	12,0	5,0	5,5	8,5	3,0	RPS 0050 0120 050 C0
6,0	12,0	4,5	5,0	9,0	3,0	RPS 0060 0120 045 C0
6,0	12,0	5,5	6,0	9,0	3,0	RPS 0060 0120 055 C0
6,0	12,0	6,0	7,0	9,0	3,0	RPS 0060 0120 060 C0
7,0	14,0	3,5	4,0	10,5	4,0	RPS 0070 0140 035 CO
8,0	12,0	5,0	5,5	10,0	2,0	RPS 0080 0120 050 CO
8,0	14,0	5,5	6,0	11,0	3,0	RPS 0080 0140 055 C0
8,0	14,0	6,0	7,0	11,0	3,0	RPS 0080 0140 060 C0
8,0	15,0	5,7	6,3	11,0	4,0	RPS 0080 0150 057 CO
8,0	16,0	5,5	6,0	12,0	4,0	RPS 0080 0160 055 CO
8,0	16,0	5,7	6,3	12,0	3,5	RPS 0080 0160 057 C0
8,0	16,0	7,0	8,0	12,0	3,5	RPS 0080 0160 070 C0
9,0	19,0	6,0	7,0	14,0	4,0	RPS 0090 0190 060 C0
10,0	16,0	6,0	6,5	13,0	3,0	RPS 0100 0160 060 C0
10,0	18,0	5,5	6,0	14,0	3,5	RPS 0100 0180 055 C0
10,0	18,0	5,7	6,3	14,0	3,5	RPS 0100 0180 057 C0
10,0	18,0	6,0	7,0	14,0	3,5	RPS 0100 0180 060 C0
10,0	18,0	8,0	9,0	14,0	3,5	RPS 0100 0180 080 C0
10,0	19,0	3,2	3,5	14,5	4,0	RPS 0100 0190 032 CO
10,0	20,0	7,0	8,0	15,0	4,0	RPS 0100 0200 070 C0
10,0	20,0	8,0	9,0	15,0	4,0	RPS 0100 0200 080 C0

d_{h11} d_{1h9}	D_{H9} D_{1H10}	h	$E_{+0,2}$	d_2**	C	ART.NR. / *ITEM*
12,0	18,0	5,0	5,5	15,0	3,0	RPS 0120 0180 050 C0
12,0	18,0	6,0	7,0	15,0	3,0	RPS 0120 0180 060 C0
12,0	20,0	4,0	4,5	16,0	4,5	RPS 0120 0200 040 CO
12,0	20,0	7,0	8,0	16,0	3,5	RPS 0120 0200 070 C0
12,0	20,0	8,0	9,0	16,0	3,5	RPS 0120 0200 080 C0
12,0	22,0	5,0	6,0	17,0	4,0	RPS 0120 0220 050 C0
12,0	22,0	7,0	8,0	17,0	4,0	RPS 0120 0220 070 C0
12,0	22,0	8,0	9,0	17,0	4,0	RPS 0120 0220 080 C0
12,0	25,0	10,0	11,0	18,5	5,0	RPS 0120 0250 100 C0
14,0	20,0	4,8	5,3	17,0	3,0	RPS 0140 0200 048 C0
14,0	22,0	4,0	4,5	18,0	3,5	RPS 0140 0220 040 C0
14,0	22,0	6,0	7,0	18,0	3,5	RPS 0140 0220 060 C0
14,0	22,0	8,0	9,0	18,0	3,5	RPS 0140 0220 080 C0
14,0	22,0	11,0	12,0	18,0	3,5	RPS 0140 0220 110 C0
14,0	24,0	7,0	8,0	19,0	4,0	RPS 0140 0240 070 C0
14,0	24,0	8,0	9,0	19,0	4,0	RPS 0140 0240 080 C0
15,0	25,0	8,0	9,0	20,0	4,0	RPS 0150 0250 080 C0
15,0	25,0	10,0	11,0	20,0	4,0	RPS 0150 0250 100 C0
16,0	22,0	4,0	4,5	19,0	3,0	RPS 0160 0220 040 C0
16,0	22,0	5,0	5,5	19,0	3,0	RPS 0160 0220 050 C0
16,0	24,0	5,0	6,0	20,0	3,5	RPS 0160 0240 050 C0
16,0	24,0	5,7	6,3	20,0	3,5	RPS 0160 0240 057 C0
16,0	24,0	7,0	8,0	20,0	3,5	RPS 0160 0240 070 CO
16,0	26,0	5,0	6,0	21,0	4,0	RPS 0160 0260 050 C0

* i enlighet med normerna ISO/DIN 5597 och ISO 5597/1
– in accordance with ISO/DIN 5597 and ISO 5597/1 norms
** krokdiameter som kan modifieras beroende på montagekrav
– hook diameter which could be modified according to mounting demand

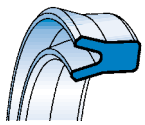

RPS

d_{h11} d_{1h9}	D_{H9} D_{1H10}	h	$E_{+0,2}$	d_2**	C	ART.NR. / *ITEM*
16,0	26,0	8,0	9,0	21,0	4,0	RPS 0160 0260 080 C0
16,0	28,0	6,0	7,0	22,0	5,0	RPS 0160 0280 060 C0
17,0	25,0	10,0	11,0	21,0	3,0	RPS 0170 0250 100 C0
18,0	25,0	5,0	5,5	21,5	3,5	RPS 0180 0250 050 C0
18,0	26,0	6,5	7,5	22,0	3,5	RPS 0180 0260 065 C0
18,0	28,0	6,0	7,0	23,0	4,0	RPS 0180 0280 060 CO
18,0	28,0	8,0	9,0	23,0	4,0	RPS 0180 0280 080 C0
18,0	30,0	8,0	9,0	24,0	5,0	RPS 0180 0300 080 C0
19,0	25,0	6,0	7,0	22,0	3,0	RPS 0190 0250 060 C0
20,0	28,0	4,0	5,0	24,0	3,5	RPS 0200 0280 040 C0
20,0	28,0	4,5	5,0	24,0	3,5	RPS 0200 0280 045 CO
20,0	30,0	8,0	9,0	25,0	4,0	RPS 0200 0300 080 C0
20,0	30,0	10,0	11,0	25,0	4,0	RPS 0200 0300 100 C0
20,0	32,0	7,5	8,5	26,0	5,0	RPS 0200 0320 075 C0
20,0	35,0	12,0	13,0	27,5	5,0	RPS 0200 0350 120 CO
20,0	40,0	10,0	11,0	30,0	7,0	RPS 0200 0400 100 C0
20,0	40,0	12,0	13,0	30,0	7,0	RPS 0200 0400 120 C0
22,0	28,0	8,0	9,0	25,0	3,0	RPS 0220 0280 080 C0
22,0	30,0	6,0	7,0	26,0	3,5	RPS 0220 0300 060 C0
22,0	30,0	10,0	11,0	26,0	3,5	RPS 0220 0300 100 C0
22,0	32,0	8,0	9,0	27,0	4,0	RPS 0220 0320 080 C0
22,0	32,0	10,0	11,0	27,0	4,0	RPS 0220 0320 100 C0
22,0	35,0	10,0	11,0	28,5	5,0	RPS 0220 0350 100 C0
22,0	40,0	10,0	11,0	31,0	6,0	RPS 0220 0400 100 C0
24,0	32,0	7,0	8,0	28,0	3,5	RPS 0240 0320 070 C0
25,0	35,0	5,0	5,5	30,0	4,0	RPS 0250 0350 050 C0
25,0	35,0	8,0	9,0	30,0	4,0	RPS 0250 0350 080 C0
25,0	35,0	10,0	11,0	30,0	4,0	RPS 0250 0350 100 C0
25,0	38,0	10,0	11,0	31,5	5,0	RPS 0250 0380 100 C0
25,0	40,0	10,0	11,0	32,5	5,0	RPS 0250 0400 100 C0
28,0	35,0	5,0	5,5	31,5	3,0	RPS 0280 0350 050 C0
28,0	36,0	5,7	6,3	33,0	4,0	RPS 0280 0360 057 C0
28,0	36,0	6,5	7,5	32,0	3,5	RPS 0280 0360 065 C0
28,0	38,0	5,7	6,3	33,0	4,0	RPS 0280 0380 057 CO
28,0	38,0	8,0	9,0	33,0	4,0	RPS 0280 0380 080 C0
28,0	40,0	10,0	11,0	34,0	5,0	RPS 0280 0400 100 C0
30,0	38,0	6,0	6,5	34,0	4,0	RPS 0300 0380 060 C0
30,0	40,0	5,0	5,5	35,0	5,0	RPS 0300 0400 050 C0
30,0	40,0	7,0	8,0	35,0	5,0	RPS 0300 0400 070 C0
30,0	40,0	10,0	11,0	35,0	5,0	RPS 0300 0400 100 C0
30,0	42,0	9,0	10,0	36,0	5,5	RPS 0300 0420 090 C0
30,0	42,0	10,0	11,0	36,0	5,5	RPS 0300 0420 100 C0

d_{h11} d_{1h9}	D_{H9} D_{1H10}	h	$E_{+0,2}$	d_2**	C	ART.NR. / *ITEM*
30,0	45,0	10,0	11,0	37,5	6,0	RPS 0300 0450 100 C0
30,0	50,0	10,0	11,0	40,0	7,0	RPS 0300 0500 100 C0
30,0	50,0	12,0	13,0	40,0	7,0	RPS 0300 0500 120 C0
32,0	40,0	5,5	6,0	36,0	4,0	RPS 0320 0400 055 C0
32,0	40,0	5,7	6,3	36,0	4,0	RPS 0320 0400 057 C0
32,0	40,0	8,0	9,0	36,0	4,0	RPS 0320 0400 080 C0
32,0	42,0	7,0	8,0	37,0	5,0	RPS 0320 0420 070 C0
32,0	42,0	10,0	11,0	37,0	5,0	RPS 0320 0420 100 C0
32,0	45,0	10,0	11,0	38,5	5,5	RPS 0320 0450 100 C0
32,0	50,0	12,0	13,0	41,0	6,5	RPS 0320 0500 120 C0
35,0	45,0	8,0	9,0	40,0	5,0	RPS 0350 0450 080 C0
35,0	45,0	10,0	11,0	40,0	5,0	RPS 0350 0450 100 C0
35,0	48,0	10,0	11,0	41,5	5,5	RPS 0350 0480 100 C0
35,0	50,0	10,0	11,0	42,5	6,0	RPS 0350 0500 100 C0
35,0	55,0	10,0	11,0	45,0	7,0	RPS 0350 0550 100 C0
36,0	46,0	7,0	8,0	41,0	5,0	RPS 0360 0460 070 C0
38,0	45,0	5,0	5,5	41,5	3,5	RPS 0380 0450 050 C0
38,0	50,0	9,0	10,0	44,0	5,5	RPS 0380 0500 090 C0
38,0	55,0	10,0	11,0	46,5	6,5	RPS 0380 0550 100 C0
40,0	50,0	6,0	7,0	45,0	5,0	RPS 0400 0500 060 C0
40,0	50,0	6,5	7,5	45,0	5,0	RPS 0400 0500 065 C0
40,0	50,0	7,0	8,0	45,0	5,0	RPS 0400 0500 070 C0
40,0	50,0	8,0	9,0	45,0	5,0	RPS 0400 0500 080 C0
40,0	50,0	10,0	11,0	45,0	5,0	RPS 0400 0500 100 C0
40,0	55,0	10,0	11,0	47,5	6,0	RPS 0400 0550 100 C0
40,0	56,0	10,0	11,0	48,0	6,0	RPS 0400 0560 100 C0
40,0	60,0	10,0	11,0	50,0	7,0	RPS 0400 0600 100 C0
40,0	60,0	13,0	14,0	50,0	7,0	RPS 0400 0600 130 C0
42,0	52,0	9,0	10,0	47,0	5,0	RPS 0420 0520 090 C0
45,0	55,0	6,5	7,5	50,0	5,0	RSP 0450 0550 065 C0
45,0	55,0	10,0	11,0	50,0	5,0	RPS 0450 0550 100 C0
45,0	60,0	10,0	11,0	52,5	6,0	RPS 0450 0600 100 C0
45,0	63,0	10,0	11,0	54,0	6,5	RPS 0450 0630 100 C0
45,0	65,0	10,0	11,0	55,0	7,0	RPS 0450 0650 100 C0
45,0	65,0	12,0	13,0	55,0	7,0	RPS 0450 0650 120 C0
48,0	58,0	10,0	11,0	53,0	5,0	RPS 0480 0580 100 C0
50,0	60,0	10,0	11,0	55,0	5,0	RPS 0500 0600 100 C0
50,0	60,0	11,0	12,0	55,0	5,0	RPS 0500 0600 110 C0
50,0	63,0	6,0	7,0	56,5	5,5	RPS 0500 0630 060 C0
50,0	65,0	10,0	11,0	57,5	6,0	RPS 0500 0650 100 C0
50,0	70,0	10,0	11,0	60,0	7,0	RPS 0500 0700 100 C0
50,0	70,0	12,0	13,0	60,0	7,0	RPS 0500 0700 120 C0

* i enlighet med normerna ISO/DIN 5597 och ISO 5597/1
– in accordance with ISO/DIN 5597 and ISO 5597/1 norms
** krokdiameter som kan modifieras beroende på montagekrav
– hook diameter which could be modified according to mounting demand

RPS

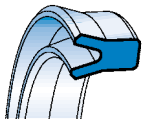

d_{h11} d_{1h9}	D_{H9} D_{1H10}	h	$E_{+0,2}$	d_2**	C	ART.NR. / *ITEM*
53,0	63,0	6,5	7,5	58,0	5,0	RPS 0530 0630 065 C0
55,0	65,0	10,0	11,0	60,0	5,0	RPS 0550 0650 100 C0
55,0	65,0	12,0	13,0	60,0	5,0	RPS 0550 0650 120 C0
55,0	70,0	12,0	13,0	62,5	6,0	RPS 0550 0700 120 C0
55,0	75,0	12,0	13,0	65,0	7,0	RPS 0550 0750 120 C0
56,0	66,0	10,0	11,0	61,0	5,0	RPS 0560 0660 100 C0
56,0	71,0	10,0	11,0	63,5	6,0	RPS 0560 0710 100 C0
60,0	70,0	8,0	9,0	65,0	5,0	RPS 0600 0700 080 C0
60,0	70,0	10,0	11,0	65,0	5,0	RPS 0600 0700 100 C0
60,0	70,0	12,0	13,0	65,0	5,0	RPS 0600 0700 120 C0
60,0	75,0	10,0	11,0	67,5	6,0	RPS 0600 0750 100 C0
60,0	75,0	12,0	13,0	67,5	6,0	RPS 0600 0750 120 C0
60,0	80,0	10,0	11,0	70,0	7,0	RPS 0600 0800 100 C0
60,0	80,0	12,0	13,0	70,0	7,0	RPS 0600 0800 120 C0
63,0	75,0	10,0	11,0	69,0	5,5	RPS 0630 0750 100 C0
63,0	78,0	10,0	11,0	70,5	6,0	RPS 0630 0780 100 C0
63,0	80,0	10,0	11,0	71,5	6,5	RPS 0630 0800 100 C0
65,0	75,0	12,0	13,0	70,0	5,0	RPS 0650 0750 120 C0
65,0	80,0	10,0	11,0	72,5	6,0	RPS 0650 0800 100 C0
65,0	80,0	11,0	12,0	72,5	6,0	RPS 0650 0800 110 C0
65,0	80,0	12,0	13,0	72,5	6,0	RPS 0650 0800 120 CO
65,0	85,0	10,0	11,0	75,0	7,0	RPS 0650 0850 100 C0
65,0	85,0	12,0	13,0	75,0	7,0	RPS 0650 0850 120 C0
66,0	76,0	8,0	9,0	71,0	5,0	RPS 0660 0760 080 C0
67,0	77,0	12,0	13,0	72,0	5,0	RPS 0670 0770 120 C0
70,0	80,0	7,0	8,0	75,0	5,0	RPS 0700 0800 070 C0
70,0	80,0	8,0	9,0	75,0	5,0	RPS 0700 0800 080 C0
70,0	80,0	10,0	11,0	75,0	5,0	RPS 0700 0800 100 C0
70,0	80,0	12,0	13,0	75,0	5,0	RPS 0700 0800 120 C0
70,0	85,0	10,0	11,0	77,5	6,0	RPS 0700 0850 100 C0
70,0	85,0	12,0	13,0	77,5	6,0	RPS 0700 0850 120 C0
70,0	90,0	10,0	11,0	80,0	7,0	RPS 0700 0900 100 CO
70,0	90,0	12,0	13,0	80,0	7,0	RPS 0700 0900 120 C0
75,0	85,0	10,0	11,0	80,0	5,0	RPS 0750 0850 100 C0
75,0	85,0	12,0	13,0	80,0	5,0	RPS 0750 0850 120 C0
75,0	90,0	10,0	11,0	82,5	6,0	RPS 0750 0900 100 C0
75,0	90,0	12,0	13,0	82,5	6,0	RPS 0750 0900 120 C0
75,0	95,0	12,0	13,0	85,0	7,0	RPS 0750 0950 120 C0
75,0	95,0	13,5	14,5	85,0	7,0	RPS 0750 0950 135 C0
80,0	90,0	7,0	8,0	85,0	5,0	RPS 0800 0900 070 C0
80,0	90,0	10,0	11,0	85,0	5,0	RPS 0800 0900 100 C0
80,0	90,0	12,0	13,0	85,0	5,0	RPS 0800 0900 120 C0

d_{h11} d_{1h9}	D_{H9} D_{1H10}	h	$E_{+0,2}$	d_2**	C	ART.NR. / *ITEM*
80,0	95,0	12,0	13,0	87,5	6,0	RPS 0800 0950 120 C0
80,0	100,0	10,0	11,0	90,0	7,0	RPS 0800 1000 100 C0
80,0	100,0	12,0	13,0	90,0	7,0	RPS 0800 1000 120 C0
85,0	95,0	8,5	9,5	90,0	5,0	RPS 0850 0950 085 C0
85,0	95,0	12,0	13,0	90,0	5,0	RPS 0850 0950 120 C0
85,0	100,0	9,0	10,0	92,5	6,0	RPS 0850 1000 090 C0
85,0	100,0	12,0	13,0	92,5	6,0	RPS 0850 1000 120 C0
85,0	105,0	12,0	13,0	95,0	7,0	RPS 0850 1050 120 C0
90,0	100,0	7,0	8,0	95,0	5,0	RPS 0900 1000 070 C0
90,0	100,0	8,0	9,0	95,0	5,0	RPS 0900 1000 080 C0
90,0	100,0	10,5	11,5	95,0	5,0	RPS 0900 1000 105 C0
90,0	100,0	12,0	13,0	95,0	5,0	RPS 0900 1000 120 C0
90,0	105,0	12,0	13,0	97,5	6,0	RPS 0900 1050 120 C0
90,0	110,0	12,0	13,0	100,0	7,0	RPS 0900 1100 120 C0
90,0	110,0	18,0	19,0	100,0	7,0	RPS 0900 1100 180 C0
95,0	105,0	12,0	13,0	100,0	5,0	RPS 0950 1050 120 C0
95,0	110,0	12,0	13,0	102,5	6,0	RPS 0950 1100 120 C0
95,0	110,0	12,5	13,5	102,5	6,0	RPS 0950 1100 125 C0
95,0	110,0	15,0	16,0	102,5	6,0	RPS 0950 1100 150 C0
95,0	112,0	11,0	12,0	103,5	6,5	RPS 0950 1120 110 C0
95,0	115,0	12,0	13,0	105,0	7,0	RPS 0950 1150 120 C0
95,0	115,0	18,0	19,0	105,0	7,0	RPS 0950 1150 180 C0
100,0	115,0	12,0	13,0	107,5	6,0	RPS 1000 1150 120 C0
100,0	120,0	12,0	13,0	110,0	7,0	RPS 1000 1200 120 C0
100,0	125,0	15,0	16,0	112,5	8,0	RPS 1000 1250 150 C0
105,0	125,0	12,0	13,0	115,0	7,0	RPS 1050 1250 120 C0
105,0	125,0	15,0	16,0	115,0	7,0	RPS 1050 1250 150 C0
110,0	130,0	15,0	16,0	120,0	7,0	RPS 1100 1300 150 C0
125,0	140,0	15,0	16,0	132,5	6,0	RPS 1250 1400 150 CO
170,0	190,0	15,0	16,0	180,0	7,0	RPS 1700 1900 150 C0
200,0	220,0	12,0	13,0	210,0	7,0	RPS 2000 2200 120 CO

Tätningar typ MAD och CSC tillverkade av Macma finns tillgängliga för diametrar större än 200 mm.
Seals type MAD and type CSC, produced by Macma, are available for diameters bigger than 200 mm.

* i enlighet med normerna ISO/DIN 5597 och ISO 5597/1
– in accordance with ISO/DIN 5597 and ISO 5597/1 norms
** krokdiameter som kan modifieras beroende på montagekrav
– hook diameter which could be modified according to mounting demand

MONTAGE - PTFE
Assembly - PTFE

Fig. 10

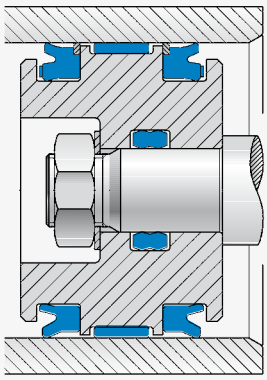

Två motstående tätningar typ PAE med anti-extrusionsring och därimellan en styrring typ HES. Båda tätningstyperna har utvecklats med spår på utsidan för att förebygga resttryck mellan de två tätningarna. Trycket skulle kunna öka och på medel/långt tidsperspektiv kunna orsaka spaltextrusion.

Two opposed PAE-type seals with anti-extrusion ring and an HES wear ring in between. Both seal types have been developed with notches on the external side to prevent residual pressure between the two seals. Pressure would keep rising and in mid / long-term could cause seal extrusion.

Fig. 11

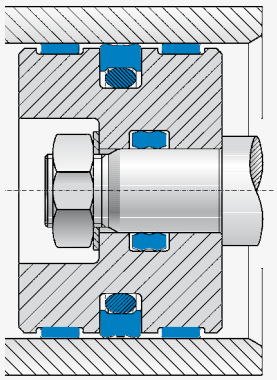

Enkelt montage av tätning typ PSO, med tätningsring av polyuretan kombinerad med två styrringar typ HES. Som ett alternativ vid höga tryck och stor spalt kan tätningar av PTFE användas.

Easy assembly of a PSO seal type, with polyurethane sealing ring combined to two HES wear rings.
As alternative for high pressures and high clearance, PTFE seals can be used.

Fig. 12

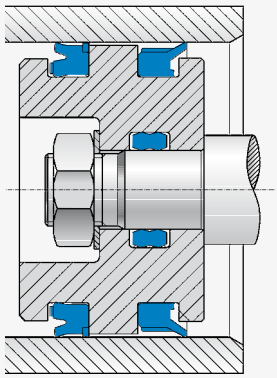

Användning av tätningar typ PAE med anti-extrusionsring och avstrykare typ WEL. Det här exemplet föreslås för alla enkelverkande cylindrar där kondensation kan uppstå eller metallpartiklar från bearbetning kan samlas på den torra sidan av kolven och därmed skada tätningen.

Use of PAE seals with anti-extrusion ring and WEL type wiper ring. This last one is suggested for all simple effect cylinders where condensation can form or tooling metal particles can accumulate on the dry side of the tube, thus damaging the seal.

Montage av kolvtätning - PTFE

Tätningar typ PTFE kräver noggrann montering jämfört med andra typer av tätningar. Det är viktigt att avlägsna grader och vassa kanter i spåren. Kolvtätningen monteras vanligtvis i följande ordning:

- passa in O-ringen i spåret;
- forma PTFE-ringen med hjälp av ett dorn och en expansionsbussning (fig. 13);
- kalibrera med hjälp av en bussning med rätt dimension (fig. 14).

Assembly of piston seal - PTFE

PTFE seals require careful assembly operations in comparison to other types of seals It is necessary to remove flashes and/or cutting edges in the grooves. The rod seal is usually assembled in the following Sequence:

- *fit the O-Ring into the groove*
- *twist the PTFE ring using a mandrel and a expansion bush (Fig.13);*
- *calibrate with a bush with right dimension (Fig.14)*

Fig. 13

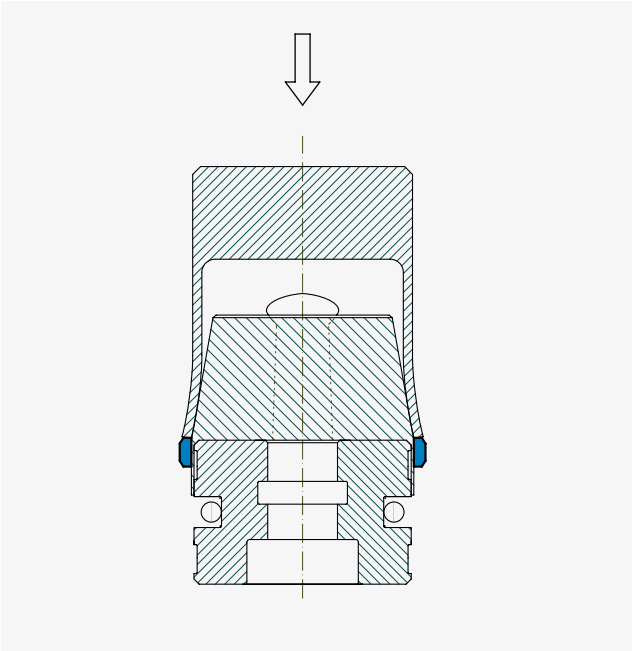

Fig. 14

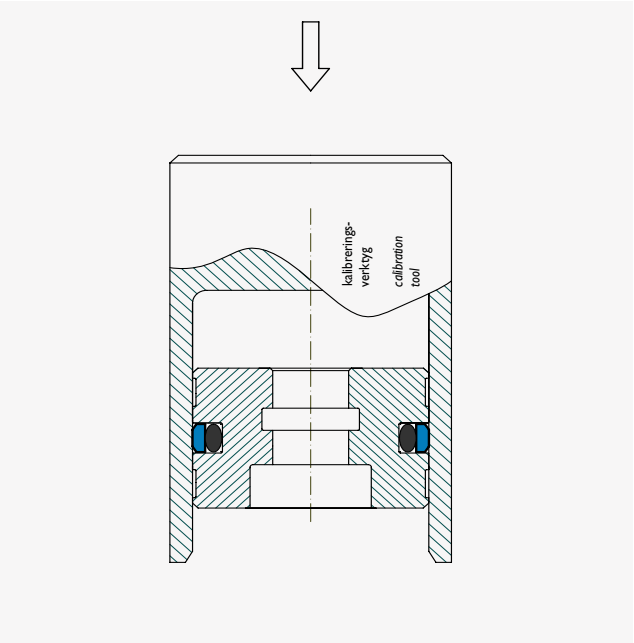

PSA

KOLVTÄTNING TYP PSA

Beskrivning

Tätningar typ PSA har utformats för att användas på kolvar och kan användas på enkel- och dubbelverkande kolvar.
Den har asymmetriska tätningsläppar som säkerställer en kontinuerlig kontakt med cylinderndiametern, även i fall av hög felinriktning.
Montaget görs i ett halvöppet spår genom överlappning eftersom materialet har en hög elasticitetsfaktor.

Tekniska data

Tryck:	<400 bar vid 60 °C
Hastighet:	<0.5 m/s
Temperatur:	från -35 °C till +100 °C med toppar upp till 110 °C
Vätskor:	mineraloljor (se tabell 1 på sida 12)

Material

Det föreslagna materialet är polyuretan typ C0, med hög elasticitetsfaktor, lågt sättningsvärde och hög slitstyrka.
Hårdheten är 93 Shore A±2.
Materialreferens: C0

Montage

Avlägsna grader och vassa kanter på kolven där tätningen ska monteras.
Fasa av cylinderdiametern för att lättare kunna trycka in kolven.
Smörj in tätningen före montage.
För mer information se installationsanvisningarna på sida 26.

PSA TYPE PISTON SEAL

Description

The PSA seal type has been conceived to work on the piston and it can be used for simple or double effect.
Its has asymmetrical lips which ensure a continuous contact with the bore, even in case of high misalignments.
The installation is done in semi-open groove by overlapping, since the material has a high modulus of elasticity.

Technical data

Pressure:	*<400 bar at a temperature of 60 °C*
Speed:	*<0.5 m/s*
Temperature:	*from - 35 °C to + 100 °C, with peaks till 110 °C*
Fluids:	*mineral-based oils and fuels (see table 1, page 12)*

Material

The material used is a polyurethane with a high modulus of elasticity, low compression set and high wear resistance.
Its hardness is 93 Shore A ± 2.
Compound reference: C0

Assembly

Remove any flash or cutting edges on the piston where the seal is housed.
Provide a lead-in chamfer in the bore to have an easier piston insertion.
Lubricate the packing before installation.
For further information please refer to the installation instructions on page 26.

ARTIC SEALS

KLINGER Sweden

PSA

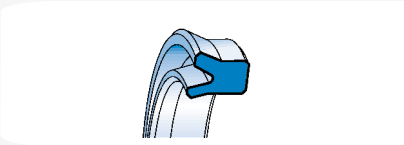

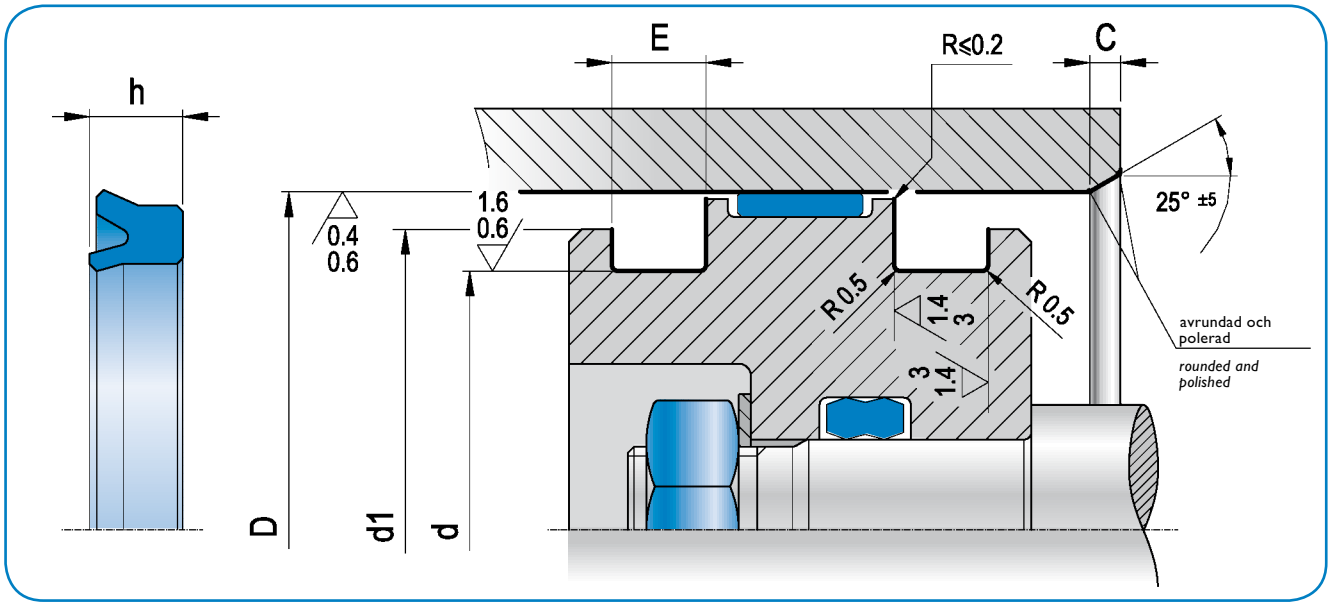

D_{H9}	d_{h9}	h	$E_{+0,2}$	d_1*	C	ART.NR. / *ITEM*
20,0	12,0	6,5	7,5	15,0	4,0	PSA 0200 0120 065 C0
20,0	14,0	5,5	6,0	17,0	3,5	PSA 0200 0140 055 C0
22,0	12,0	8,0	9,0	16,0	5,0	PSA 0220 0120 080 C0
25,0	15,0	8,0	9,0	19,0	5,0	PSA 0250 0150 080 C0
30,0	20,0	8,0	9,0	24,0	5,0	PSA 0300 0200 080 C0
30,0	22,0	6,5	7,0	26,0	5,0	PSA 0300 0220 065 C0
32,0	22,0	10,0	11,0	26,0	5,0	PSA 0320 0220 100 C0
32,0	24,0	5,7	6,3	28,0	4,0	PSA 0320 0240 057 C0
32,0	26,0	5,0	6,0	28,0	3,5	PSA 0320 0260 050 C0
35,0	20,0	10,0	11,0	25,0	5,5	PSA 0350 0200 100 C0
35,0	25,0	8,0	9,0	29,0	5,0	PSA 0350 0250 080 C0
37,0	21,0	12,0	13,0	25,0	6,0	PSA 0370 0210 120 C0
40,0	25,0	10,0	11,0	30,0	6,0	PSA 0400 0250 100 C0
40,0	30,0	6,5	7,5	34,0	5,0	PSA 0400 0300 065 C0
40,0	30,0	10,0	11,0	34,0	5,0	PSA 0400 0300 100 C0
40,0	32,0	5,5	6,5	36,0	4,0	PSA 0400 0320 055 C0
40,0	32,0	8,0	9,0	36,0	4,0	PSA 0400 0320 080 C0
42,0	32,0	10,0	11,0	36,0	5,0	PSA 0420 0320 100 C0
45,0	30,0	10,0	11,0	35,0	6,0	PSA 0450 0300 100 C0
50,0	30,0	12,0	13,0	35,0	7,0	PSA 0500 0300 120 C0
50,0	32,0	10,0	11,0	37,0	6,5	PSA 0500 0320 100 C0
50,0	35,0	8,5	9,5	40,0	6,0	PSA 0500 0350 085 C0
50,0	35,0	10,0	11,0	40,0	6,0	PSA 0500 0350 100 C0
50,0	40,0	5,0	5,5	44,0	5,0	PSA 0500 0400 050 C0
50,0	40,0	10,0	11,0	44,0	5,0	PSA 0500 0400 100 C0
50,0	42,0	5,5	6,0	45,0	4,0	PSA 0500 0420 055 C0
50,0	42,0	8,0	9,0	45,0	4,0	PSA 0500 0420 080 C0

D_{H9}	d_{h9}	h	$E_{+0,2}$	d_1*	C	ART.NR. / *ITEM*
55,0	40,0	10,0	11,0	45,0	6,0	PSA 0550 0400 100 C0
60,0	40,0	12,0	13,0	45,0	7,0	PSA 0600 0400 120 C0
60,0	45,0	10,0	11,0	50,0	6,0	PSA 0600 0450 100 C0
60,0	50,0	7,0	8,0	54,0	5,0	PSA 0600 0500 070 C0
60,0	50,0	10,0	11,0	54,0	5,0	PSA 0600 0500 100 C0
63,0	43,0	12,0	13,0	47,0	7,0	PSA 0630 0430 120 C0
63,0	45,0	12,0	13,0	50,0	6,0	PSA 0630 0450 120 C0
63,0	48,0	6,5	7,5	53,0	6,5	PSA 0630 0480 065 CO
63,0	48,0	10,0	11,0	53,0	6,0	PSA 0630 0480 100 C0
63,0	48,0	12,0	13,0	53,0	6,0	PSA 0630 0480 120 C0
63,0	53,0	7,0	8,0	57,0	5,0	PSA 0630 0530 070 C0
63,0	53,0	12,0	13,0	57,0	5,0	PSA 0630 0530 120 C0
65,0	45,0	12,0	13,0	50,0	7,0	PSA 0650 0450 120 C0
65,0	50,0	10,0	11,0	55,0	6,0	PSA 0650 0500 100 C0
70,0	50,0	12,0	13,0	55,0	7,0	PSA 0700 0500 120 C0
70,0	55,0	9,5	10,5	60,0	6,0	PSA 0700 0550 095 CO
70,0	55,0	12,0	13,0	60,0	6,0	PSA 0700 0550 120 C0
70,0	60,0	7,0	8,0	64,0	5,0	PSA 0700 0600 070 C0
70,0	60,0	12,0	13,0	64,0	5,0	PSA 0700 0600 120 C0
70,0	62,0	7,5	8,5	65,0	4,5	PSA 0700 0620 075 C0
75,0	55,0	13,5	14,5	60,0	7,0	PSA 0750 0550 135 C0
75,0	65,0	7,0	8,0	69,0	5,0	PSA 0750 0650 070 C0
75,0	65,0	10,0	11,0	69,0	5,0	PSA 0750 0650 100 C0
80,0	60,0	12,0	13,0	65,0	7,0	PSA 0800 0600 120 C0
80,0	65,0	12,0	13,0	70,0	6,0	PSA 0800 0650 120 C0
80,0	68,0	8,5	9,5	72,0	5,5	PSA 0800 0680 085 C0
80,0	70,0	7,0	8,0	74,0	5,0	PSA 0800 0700 070 C0

* rekommenderad krokdiameter som kan modifieras beroende på montagekrav
recommended hook diameter which could be modified according to mounting demand

PSA

D_{H9}	d_{h9}	h	$E_{+0,2}$	d_1*	C	ART.NR. / *ITEM*
80,0	70,0	12,0	13,0	74,0	5,0	PSA 0800 0700 120 C0
85,0	65,0	12,0	13,0	70,0	7,0	PSA 0850 0650 120 C0
85,0	65,0	13,5	14,5	70,0	7,0	PSA 0850 0650 135 C0
85,0	70,0	12,0	13,0	75,0	6,0	PSA 0850 0700 120 C0
85,0	75,0	10,0	11,0	79,0	5,0	PSA 0850 0750 100 C0
90,0	70,0	12,0	13,0	75,0	7,0	PSA 0900 0700 120 C0
90,0	70,0	13,5	14,5	75,0	7,0	PSA 0900 0700 135 C0
90,0	75,0	12,0	13,0	80,0	6,0	PSA 0900 0750 120 C0
90,0	80,0	10,0	11,0	84,0	5,0	PSA 0900 0800 100 C0
95,0	80,0	12,0	13,0	85,0	6,0	PSA 0950 0800 120 C0
95,0	85,0	7,0	8,0	89,0	5,0	PSA 0950 0850 070 C0
100,0	80,0	10,0	11,0	85,0	7,0	PSA 1000 0800 100 C0
100,0	80,0	12,0	13,0	85,0	7,0	PSA 1000 0800 120 C0
100,0	85,0	12,0	13,0	90,0	6,0	PSA 1000 0850 120 C0
100,0	88,0	8,5	9,5	93,0	5,5	PSA 1000 0880 085 C0
100,0	90,0	7,0	8,0	94,0	5,0	PSA 1000 0900 070 C0
105,0	90,0	12,0	13,0	95,0	6,0	PSA 1050 0900 120 C0
110,0	90,0	12,0	13,0	95,0	7,0	PSA 1100 0900 120 C0

D_{H9}	d_{h9}	h	$E_{+0,2}$	d_1*	C	ART.NR. / *ITEM*
110,0	95,0	12,0	13,0	100,0	6,0	PSA 1100 0950 120 C0
115,0	95,0	15,0	16,0	105,0	7,0	PSA 1150 0950 150 C0
115,0	100,0	12,0	13,0	105,0	6,0	PSA 1150 1000 120 C0
120,0	100,0	12,0	13,0	105,0	7,0	PSA 1200 1000 120 C0
120,0	105,0	12,0	13,0	110,0	6,0	PSA 1200 1050 120 C0
125,0	100,0	15,0	16,0	105,0	8,0	PSA 1250 1000 150 C0
125,0	105,0	12,0	13,0	110,0	7,0	PSA 1250 1050 120 C0
125,0	105,0	15,0	16,0	110,0	7,0	PSA 1250 1050 150 C0
125,0	110,0	10,0	11,0	115,0	6,0	PSA 1250 1100 100 C0
130,0	110,0	15,0	16,0	115,0	7,0	PSA 1300 1100 150 C0
140,0	120,0	12,0	13,0	125,0	7,0	PSA 1400 1200 120 C0
150,0	130,0	15,0	16,0	135,0	7,0	PSA 1500 1300 150 C0
160,0	140,0	11,5	12,5	145,0	7,0	PSA 1600 1400 115 C0
160,0	140,0	15,0	16,0	145,0	7,0	PSA 1600 1400 150 C0
180,0	160,0	11,5	12,5	165,0	7,0	PSA 1800 1600 115 C0
180,0	160,0	15,0	16,0	165,0	7,0	PSA 1800 1600 150 C0
200,0	170,0	19,0	20,0	175,0	8,0	PSA 2000 1700 190 C0
250,0	220,0	19,0	20,0	225,0	8,0	PSA 2500 2200 190 C0

* rekommenderad krokdiameter som kan modifieras beroende på montagekrav
recommended hook diameter which could be modified according to mounting demand

OBS: Kontakta vår tekniska avdelning för dimensioner som inte finns i katalogen.
Remark: please contact our technical dept. for further dimensions not included in the catalogue.

PSA

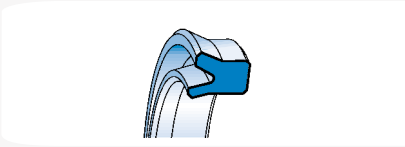

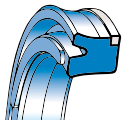

PAE

KOLVTÄTNING TYP PAE MED ANTI-EXTRUSIONSRING

Beskrivning

Tätningar typ PAE är särskilt utformade för tunga applikationer.
När spalten mellan kolv och cylinderdiameter inte kan reduceras och vid mycket högt tryck (över 250 bar), är tätningar typ PAE den mest lämpliga tack vare en stark anti-extrusionsring.

Tekniska data

Tryck:	<400 bar vid 60 °C
Hastighet:	<0,5 m/s
Temperatur:	från -35 °C till +100 °C med toppar upp till 110 °C
Vätskor:	Mineraloljor (se tabell 1 på sida 12)

Material

Materialet i tätningen är polyuretan typ C0 vid 93 Shore A med hög elasticitetsfaktor. Anti-extrusionsringen är av acetylharts typ R0 förstärkt med glasfiber och med hög draghållfasthet.
Materialreferens: CR

Montage

Montage av denna tätning görs i ett halvöppet spår.
Anti-extrusionsringen monteras efter tätningen.
Det är viktigt att avlägsna grader och vassa kanter på kolven för att tätningen inte ska skadas vid överlappning.

PAE TYPE PISTON SEAL WITH ANTIEXTRUSION RING

Description

The PAE seal type is specially designed for heavy duty applications.
When the coupling clearance between bore and piston cannot be reduced and the pressure is very high - above 250 bar - the PAE seal type, thanks to a strong anti-extrusion ring, is among the most appropriate of seal types.

Technical data

Pressure:	*<400 bar at a temperature of 60 °C*
Speed:	*<0.5 m/s*
Temperature:	*from - 35 °C till +100 °C*
Fluids:	*mineral oils (see table 1, page 12)*

Material

The material used for the seal is polyurethane C0-type at 93 Shore A with high elasticity module. The anti-extrusion ring is made of acetylic resin R0-type reinforced with fibreglass and with high tensile strength.
Compound reference: CR

Assembly

The assembly of this seal is done in semi-open groove.
The anti-extrusion ring should be installed after the seal.
It is important to remove any flash or cutting edge on the piston not to damage the seal during the overlapping.

PAE

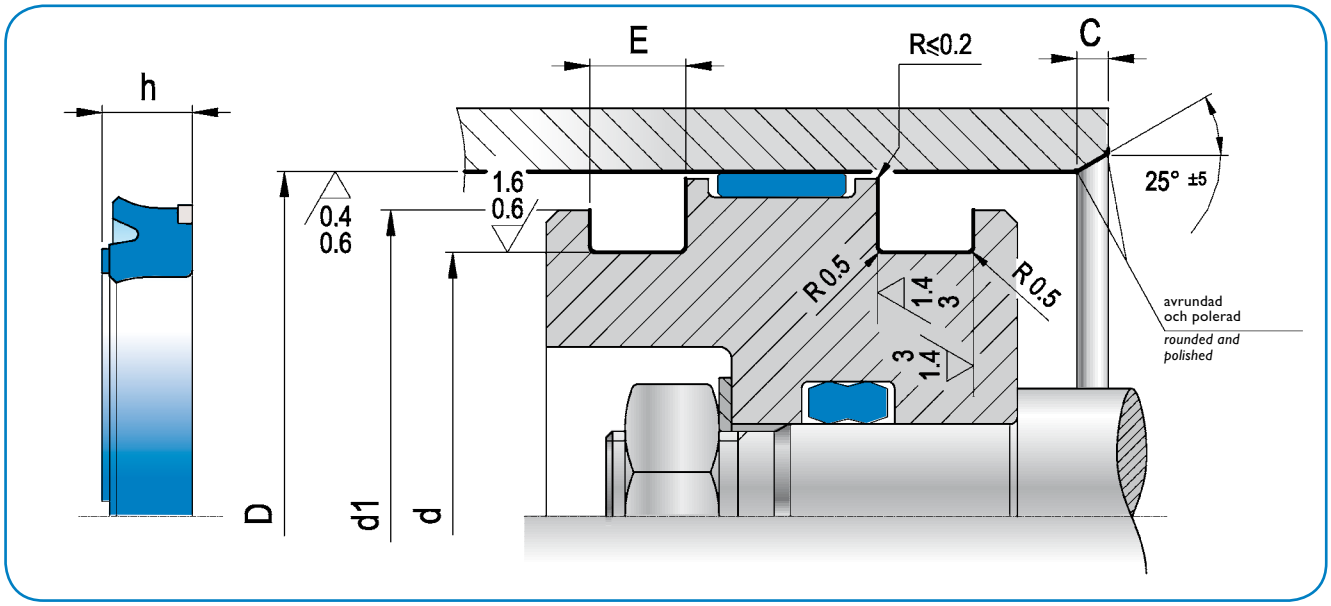

D_{H9}	d_{h9}	d_1*	h	$E_{+0,2}$	C	ART.NR. / *ITEM*
40,0	25,0	35,0	9,3	9,5	4,0	PAE 0400 0250 093 CR
45,0	30,0	40,0	9,3	9,5	4,0	PAE 0450 0300 093 CR
50,0	35,0	45,0	9,3	9,5	4,0	PAE 0500 0350 093 CR
55,0	40,0	50,0	9,3	9,5	4,0	PAE 0550 0400 093 CR
60,0	45,0	55,0	9,3	9,5	4,0	PAE 0600 0450 093 CR
63,0	48,0	58,0	9,3	9,5	4,0	PAE 0630 0480 093 CR
65,0	50,0	60,0	9,3	9,5	4,0	PAE 0650 0500 093 CR
70,0	50,0	64,0	12,2	12,5	5,0	PAE 0700 0500 122 CR
75,0	55,0	69,0	12,2	12,5	5,0	PAE 0750 0550 122 CR
80,0	60,0	74,0	12,2	12,5	5,0	PAE 0800 0600 122 CR
85,0	70,0	80,0	9,3	9,5	4,0	PAE 0850 0700 093 CR
90,0	70,0	84,0	12,2	12,5	5,0	PAE 0900 0700 122 CR

D_{H9}	d_{h9}	d_1*	h	$E_{+0,2}$	C	ART.NR. / *ITEM*
100,0	80,0	94,0	12,2	12,5	5,0	PAE 1000 0800 122 CR
105,0	85,0	99,0	12,2	12,5	5,0	PAE 1050 0850 122 CR
110,0	90,0	104,0	12,2	12,5	5,0	PAE 1100 0900 122 CR
115,0	95,0	109,0	12,2	12,5	5,0	PAE 1150 0950 122 CR
125,0	100,0	117,0	15,2	16,2	6,5	PAE 1250 1000 152 CR
125,0	105,0	119,0	12,2	12,5	5,0	PAE 1250 1050 122 CR
130,0	110,0	124,0	12,2	12,5	5,0	PAE 1300 1100 122 CR
140,0	115,0	132,0	15,2	16,2	6,5	PAE 1400 1150 152 CR
140,0	120,0	134,0	12,2	12,5	5,0	PAE 1400 1200 122 CR

* krokdiameter som kan modifieras beroende på montagekrav
recommended hook diameter which could be modified according to mounting demand

OBS: Kontakta vår tekniska avdelning för dimensioner som inte finns i katalogen.
Remark: please contact our technical dept. for further dimensions not included in the catalogue.

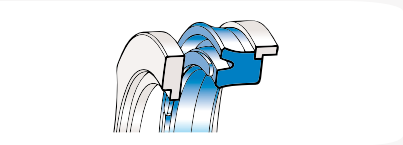

PSH+RR

KOLVTÄTNING TYP PSH + RR MED STYRRING OCH STOPPRING

Beskrivning

Kolvtätningar typ PSH liknar typ PSA men har en styrring av acetylharts för att minska möjliga felinriktningar och undvika spaltextrusioner.
En stoppring typ RR av termoplastisk harts förhindrar spaltextrusion under vändningsfasen.

Tekniska data

Tryck:	<400 bar vid 60 °C
Hastighet:	<0,5 m/s
Temperatur:	från -35 °C till +100 °C med toppar upp till +110 °C
Vätskor:	mineralvätskor och oljor (se tabell 1 på sida 12)

Material

Det föreslagna materialet är polyuretan typ C0, med hög elasticitetsfaktor, lågt sättningsvärde och hög slitstyrka. Styrringen är av acetylharts typ R0 förstärkt med glasfiber.
Materialreferens PSH: CR
Stoppringen är av termosplastisk harts typ R2.
Materialreferens RR: R2

Montage

Avlägsna grader och vassa kanter på kolven där tätningen ska monteras.
Fasa av cylinderkanten för att lättare kunna trycka in kolven.
Smörj in tätningen före montage.
För mer information se installationsanvisningarna på sida 26.

PSH+RR TYPE PISTON SEAL WITH WEAR AND RETAINING RING

Description

The PSH piston seal type is similar to the PSA type, but it has an acetylic resin wear ring to mitigate possible misalignments and avoid extrusion.
A RR retaining ring made of thermoplastic resin prevents seal extrusion during the cycle inversion.

Technical data

Pressure:	*<400 bar at a temperature of 60 °C*
Speed:	*<0.5 m/s*
Temperature:	*from - 35 °C to + 100 °C with peaks till +110 °C*
Fluids:	*mineral fluids and oils (see table 1, page 12)*

Material

The proposed material is a C0-type polyurethane with high modulus of elasticity, low compression set and high abrasion resistance. The wear ring is made of a R0-type acetylic resin reinforced with fibreglass.
Compound reference PSH: CR
The retaining seal is made of thermoplastic resin, R2 type.
Compound reference RR: R2

Assembly

Avoid all cutting edges and flash on the piston where the seal is housed.
A lead-in chamfer in the groove will facilitate the piston insertion.
Lubricate the seal before installation.
For further information please refer to the installation instructions on page 26.

PSH+RR

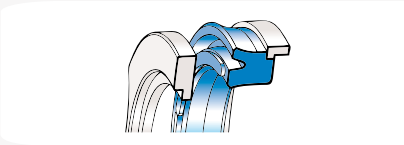

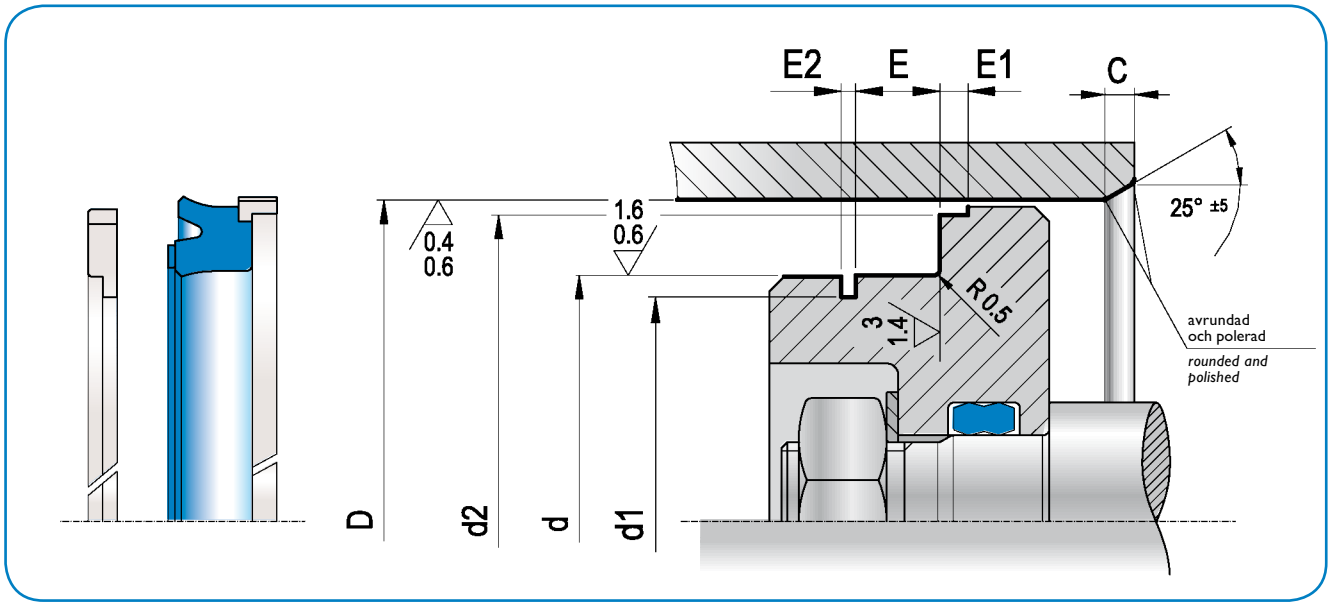

D_{H9}	d_{h9}	E +0,2	E_2 +0,1 +0,2	d_2 0/-0,05	E_1 ±0,1	C	d_1 ±0,1	ART.NR. / *ITEM*	ART.NR. / *ITEM*
32,0	20,0	10,0	3,10	28,50	6,35	4,0	15,80	PSH 0320 0200 100 CR	RR 0320 0200 R2
35,0	22,0	10,0	3,10	31,40	6,35	4,0	17,80	PSH 0350 0220 100 CR	RR 0350 0220 R2
40,0	26,0	9,4	3,10	35,40	6,35	4,0	21,60	PSH 0400 0260 094 CR	RR 0400 0260 R2
45,0	30,0	9,5	3,10	40,40	6,35	4,0	25,80	PSH 0450 0300 095 CR	RR 0450 0300 R2
50,0	30,0	14,5	3,35	44,30	6,35	4,0	25,80	PSH 0500 0300 145 CR	RR 0500 0300 R2
50,0	35,0	11,0		45,35	6,35	4,0		PSH 0500 0350 110 CR	
55,0	40,0	11,0	3,10	50,36	6,35	4,0	35,80	PSH 0550 0400 110 CR	RR 0550 0400 R2
60,0	40,0	14,5	3,35	55,40	6,35	4,0	36,10	PSH1 0600 0400 145 CR	RR 0600 0400 R2
60,0	40,0	14,5	3,35	54,20	6,35	4,0	36,10	PSH 0600 0400 145 CR	RR 0600 0400 R2
60,0	45,0	11,0		54,20	6,35	4,0		PSH 0600 0450 110 CR	
63,0	45,0	10,5	3,10	58,40	6,35	4,0	40,84	PSH 0630 0450 105 CR	RR 0630 0450 R2
70,0	50,0	14,5	3,35	64,20	6,35	5,0	45,84	PSH 0700 0500 145 CR	RR 0700 0500 R2
75,0	55,0	14,5	3,35	69,20	6,35	5,0	51,10	PSH 0750 0550 145 CR	RR 0750 0550 R2
90,0	70,0	14,5	3,35	84,15	6,35	5,0	66,10	PSH 0900 0700 145 CR	RR 0900 0700 R2
95,0	75,0	14,5	3,35	89,15	6,35	5,0	71,10	PSH 0950 0750 145 CR	RR 0950 0750 R2

OBS: Kontakta vår tekniska avdelning för dimensioner som inte finns i katalogen.
Remark: please contact our technical dept. for further dimensions not included in the catalogue.

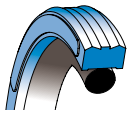

PSO

KOLVTÄTNING TYP PSO

Beskrivning

Tätningar typ PSO har en dubbel profil på den dynamiska sidan och en yta med två små plattor på den statiska sidan där O-ringen sitter.
Närvaron av O-ringen, som förstärker tätningen, säkerställer en perfekt tätning vid både låga och höga tryck.
Den speciella dubbla profilen gör att hydrodynamiskt tryck på tätningsdelen och den resulterande utblåsningseffekten undviks.

Tekniska data

Tryck:	<250 bar med standardmaterial 93 Sh A vid 60 °C (C0)
Tryck:	<400 bar med alternativt material 98 Sh A vid 60 °C (D0)
Tryck:	<500 bar med alternativt material 55 Sh D vid 60 °C (E0)
Hastighet:	<0,5 m/s
Temperatur:	från -35 °C till +100 °C med toppar upp till 110 °C
Vätskor:	mineralbaserade vätskor (se tabell 1 på sida 12)

Material

Det valda materialet är polyuretan med hårdhet enligt arbetstryck (C0 eller D0 eller E0).
O-ringen har hårdhet 70 Shore A. (N0).
Materialreferens: CN (alternativt DN eller EN).

Montage

Avlägsna grader och vassa kanter på höljet där tätningen ska monteras.
Fasa av cylinderdiametern för att lättare kunna trycka in kolven.
För mer information se installationsanvisningarna på sida 26.

PSO TYPE PISTON SEAL

Description

The PSO seal type shows a double profile on the dynamic side and a surface with two small steps on the static side, where the O-ring is housed.
The presence of the O-ring, which energizes the seal, ensures a perfect seal performance at low and high pressure.
The special double profile avoids any Hydro-dynamic pressure on the sealing part and the consequent blow-by effect.

Technical data

Pressure:	*<250 bar with standard material 93 Sh A at 60 °C (C0)*
Pressure:	*<400 bar with alternative material 98 Sh A at 60 °C (D0)*
Pressure:	*<500 bar with alternative material 55 Sh D at 60 °C (E0)*
Speed:	*<0.5 m/s*
Temperature:	*from - 35 °C to + 100 °C, with peaks at 110 °C*
Fluids:	*mineral-based fluids (see table 1, page 12)*

Material

The chosen material is polyurethane, with hardness according to the working pressure (C0 o D0 o E0).
The O-ring is in NBR hardness is of 70 Shore A (N0).
Compound reference: CN (or, in alternative, DN or EN).

Assembly

Remove any cutting edges and flash in the housing of the seal.
Ensure a lead-in chamfer in the bore to facilitate the piston installation.
For further information please refer to the installation instructions page 26.

PSO

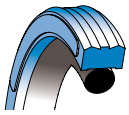

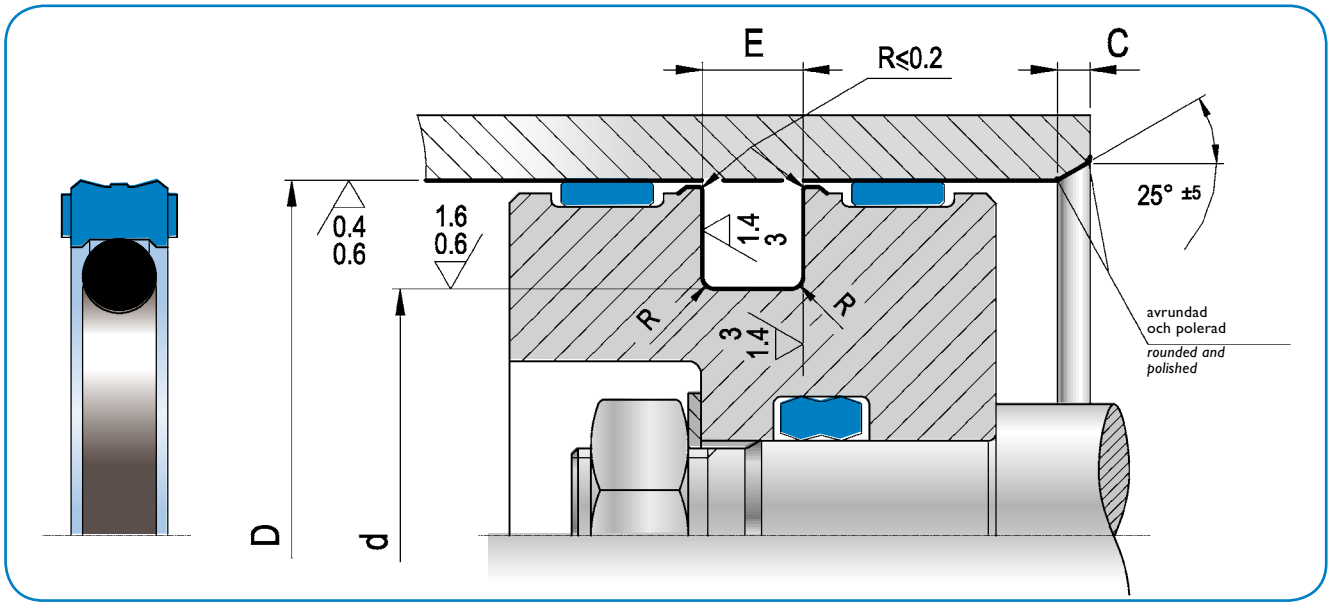

D_{H9}	d_{h9}	$E_{+0,2}$	C	R	O-ring (no)	ART.NR. / *ITEM*
12,00	7,1	2,2	2,0	0,2	OR 016	PSO 0120 0710 022 CN
* 20,00	12,50	3,2	3,0	0,2	OR 112	PSO 0200 0125 032 CN
22,00	14,50	3,2	3,0	0,2	OR 113	PSO 0220 0145 032 CN
24,00	16,50	3,2	3,0	0,2	OR 114	PSO 0240 0165 032 CN
* 25,00	14,00	4,2	4,0	0,4	OR 207	PSO 0250 0140 042 CN
* 25,00	17,50	3,2	3,0	0,2	OR 115	PSO 0250 0175 032 CN
28,00	20,50	3,2	3,0	0,4	OR 117	PSO 0280 0205 032 CN
30,00	22,50	3,2	3,0	0,4	OR 118	PSO 0300 0225 032 CN
32,00	21,00	4,2	4,0	0,4	OR 211	PSO 0320 0210 042 CN
* 32,00	24,50	3,2	3,0	0,4	OR 119	PSO 0320 0245 032 CN
35,00	24,00	4,2	4,0	0,4	OR 213	PSO 0350 0240 042 CN
35,00	27,50	3,2	3,0	0,4	OR 121	PSO 0350 0275 032 CN
36,00	25,00	4,2	4,0	0,4	OR 213	PSO 0360 0250 042 CN
36,00	28,50	3,2	3,0	0,4	OR 122	PSO 0360 0285 032 CN
38,00	30,50	3,2	3,0	0,4	OR 123	PSO 0380 0305 032 CN
40,00	24,50	6,3	5,0	0,5	OR 318	PSO 0400 0245 063 CN
* 40,00	29,00	4,2	4,0	0,4	OR 216	PSO 0400 0290 042 CN
42,00	31,00	4,2	4,0	0,5	OR 217	PSO 0420 0310 042 CN
45,00	29,50	6,3	5,0	0,5	OR 320	PSO 0450 0295 063 CN
45,00	34,00	4,2	4,0	0,5	OR 219	PSO 0450 0340 042 CN
48,00	37,00	4,2	4,0	0,5	OR 221	PSO 0480 0370 042 CN
49,00	38,00	4,2	4,0	0,5	OR 222	PSO 0490 0380 042 CN
50,00	34,50	6,3	5,0	0,5	OR 324	PSO 0500 0345 063 CN
* 50,00	39,00	4,2	4,0	0,5	OR 222	PSO 0500 0390 042 CN
50,80	39,80	4,2	4,0	0,5	OR 222	PSO 0508 0398 042 CN
52,00	36,50	6,3	5,0	0,5	OR 324	PSO 0520 0365 063 CN
55,00	39,50	6,3	5,0	0,5	OR 325	PSO 0550 0395 063 CN

D_{H9}	d_{h9}	$E_{+0,2}$	C	R	O-ring (no)	ART.NR. / *ITEM*
55,00	44,00	4,2	4,0	0,5	OR 224	PSO 0550 0440 042 CN
57,00	46,00	4,2	4,0	0,5	OR 224	PSO 0570 0460 042 CN
60,00	44,50	6,3	5,0	0,5	OR 327	PSO 0600 0445 063 CN
60,00	49,00	4,2	4,0	0,5	OR 225	PSO 0600 0490 042 CN
* 63,00	47,50	6,3	5,0	0,5	OR 328	PSO 0630 0475 063 CN
* 63,00	52,00	4,2	4,0	0,5	OR 226	PSO 0630 0520 042 CN
63,50	52,50	4,2	4,0	0,5	OR 226	PSO 0635 0525 042 CN
65,00	49,50	6,3	5,0	0,5	OR 328	PSO 0650 0495 063 CN
65,00	54,00	4,2	4,0	0,5	OR 227	PSO 0650 0540 042 CN
70,00	54,50	6,3	5,0	0,5	OR 330	PSO 0700 0545 063 CN
70,00	59,00	4,2	4,0	0,5	OR 228	PSO 0700 0590 042 CN
72,00	61,00	4,2	4,0	0,5	OR 229	PSO 0720 0610 042 CN
75,00	59,50	6,3	5,0	0,5	OR 331	PSO 0750 0595 063 CN
75,00	64,00	4,2	4,0	0,5	OR 230	PSO 0750 0640 042 CN
* 80,00	64,50	6,3	5,0	0,5	OR 333	PSO 0800 0645 063 CN
* 80,00	69,00	4,2	4,0	0,5	OR 842	PSO 0800 0690 042 CN
85,00	69,50	6,3	5,0	0,5	OR 335	PSO 0850 0695 063 CN
88,90	73,40	6,3	5,0	0,5	OR 336	PSO 0889 0734 063 CN
90,00	74,50	6,3	5,0	0,5	OR 336	PSO 0900 0745 063 CN
95,00	79,50	6,3	5,0	0,5	OR 338	PSO 0950 0795 063 CN
* 100,00	84,50	6,3	5,0	0,5	OR 339	PSO 1000 0845 063 CN
105,00	89,50	6,3	5,0	0,5	OR 341	PSO 1050 0895 063 CN
110,00	94,50	6,3	5,0	0,5	OR 343	PSO 1100 0945 063 CN
115,00	94,00	8,1	6,0	0,5	OR 94X7	PSO 1150 0940 081 CN
115,00	99,50	6,3	5,0	0,5	OR 344	PSO 1150 0995 063 CN
118,00	102,50	6,3	5,0	0,5	OR 345	PSO 1180 1025 063 CN
120,00	104,50	6,3	5,0	0,5	OR 346	PSO 1200 1045 063 CN

* i enlighet med normerna ISO/DIN 5597 och ISO 5597/1
– in accordance with ISO/DIN 5597 and ISO 5597/1 norms

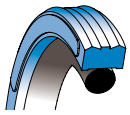

PSO

	D_{H9}	d_{h9}	$E_{+0,2}$	C	R	O-ring (no)	ART.NR. / *ITEM*				
*	125,00	104,00	8,1	6,0	0,5	OR 100X7	PSO	1250	1040	081	CN
*	125,00	109,50	6,3	5,0	0,5	OR 347	PSO	1250	1095	063	CN
	130,00	109,00	8,1	6,0	0,6	OR 106X7	PSO	1300	1090	081	CN
	130,00	114,50	6,3	5,0	0,6	OR 349	PSO	1300	1145	063	CN
	135,00	114,00	8,1	6,0	0,6	OR 425	PSO	1350	1140	081	CN
	135,00	119,50	6,3	5,0	0,6	OR 350	PSO	1350	1195	063	CN
	140,00	119,00	8,1	6,0	0,6	OR 426	PSO	1400	1190	081	CN
	145,00	124,00	8,1	6,0	0,6	OR 428	PSO	1450	1240	081	CN
	150,00	129,00	8,1	6,0	0,6	OR 430	PSO	1500	1290	081	CN
*	160,00	139,00	8,1	6,0	0,6	OR 433	PSO	1600	1390	081	CN
	170,00	149,00	8,1	6,0	0,6	OR 436	PSO	1700	1490	081	CN
	177,80	156,80	8,1	6,0	0,6	OR 437	PSO	1778	1568	081	CN
	180,00	159,00	8,1	6,0	0,6	OR 438	PSO	1800	1590	081	CN
	185,00	164,00	8,1	6,0	0,6	OR 874	PSO	1850	1640	081	CN
	190,00	169,00	8,1	6,0	0,6	OR 439	PSO	1900	1690	081	CN
*	200,00	179,00	8,1	6,0	0,6	OR 441	PSO	2000	1790	081	CN
	210,00	189,00	8,1	6,0	0,6	OR 443	PSO	2100	1890	081	CN
	220,00	199,00	8,1	6,0	0,6	OR 444	PSO	2200	1990	081	CN
	230,00	209,00	8,1	6,0	0,6	OR 445	PSO	2300	2090	081	CN
	240,00	219,00	8,1	6,0	0,6	OR 446	PSO	2400	2190	081	CN
*	250,00	229,00	8,1	6,0	0,6	OR 447	PSO	2500	2290	081	CN

* i enlighet med normerna ISO/DIN 5597 och ISO 5597/1
– in accordance with ISO/DIN 5597 and ISO 5597/1 norms

Alternativt material: DN (98 Sh A); EN (55 Sh D)
– Alternative compounds: DN (98 Sh A); EN (55 Sh D)

OBS: Kontakta vår tekniska avdelning för dimensioner som inte finns i katalogen.
Remark: please contact our technical dept. for further dimensions not included in the catalogue.

PSO

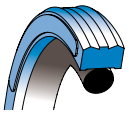

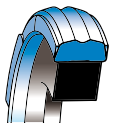

PSQ

KOLVTÄTNING TYP PSQ

Beskrivning

Tätningar typ PSQ har en dubbel profil på den dynamiska sidan och en yta med två små plattor på den statiska sidan där X-ringen sitter.
X-ringen förstärker tätningen och säkerställer en perfekt tätning vid både låga och höga tryck.
Den centrala dubbla profilens form gör att hydrodynamiskt tryck på tätningsdelen och den resulterande utblåsningseffekten undviks.

Tekniska data

Tryck:	<250 Bar med material typ C0 vid 93 Shore A vid 60 °C. <400 Bar med material typ D0 vid 98 Shore A vid 60 °C.
Hastighet:	<0,8 m/s
Temperatur:	från -35 °C till +100 °C med toppar upp till 110 °C.
Vätskor:	mineraloljor (se tabell 1 på sida 12)

Material

Det valda materialet är polyuretan med olika hårdhet enligt arbetstryck.
Materialreferens: CQ (93 Shore A med X-ring) eller alternativt DQ (98 Shore A med X-ring).

Montage

Avlägsna grader och vassa kanter i tätningens hölje.
Fasa av cylinderdiametern för att lättare kunna trycka in kolven.
För mer information se installationsanvisningarna på sida 26.

PSQ TYPE PISTON SEAL

Description

The PSQ seal has a double profile in the in the dynamic part, and two small steps in the static part where the Q-ring is housed.
The Q-ring energizes the seal and provides a perfect sealing performance at low and high pressure.
The shape of the central double profile prevents hydrodynamic pressures on the seal and the resulting blow-out effect.

Technical data

Pressure:	*<250 Bar with a C0-type material at 93 Shore A, at a temperature of 60 °C.* *<400 Bar a D0-type material, at 98 Shore A, at a temperature of 60 °C.*
Speed:	*<0.8 m/s*
Temperature:	*from – 35 °C to + 100 °C with peaks up to 110 °C.*
Fluids:	*mineral oils (see table 1, page 12)*

Material

The sealing parts are in polyurethanes with different hardness, according to the specific operating pressures.
Compound reference: CQ (93 Shore A with Q-ring) or, alternatively, DQ (98 Shore A with Q-ring)

Assembly

Cutting edges or flash must be removed in the housing of the seal.
Ensure a lead-in chamfer in the bore to facilitate the piston installation.
For further information please refer to the assembly instructions on page 26.

PSQ

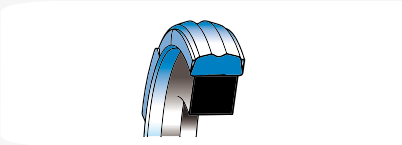

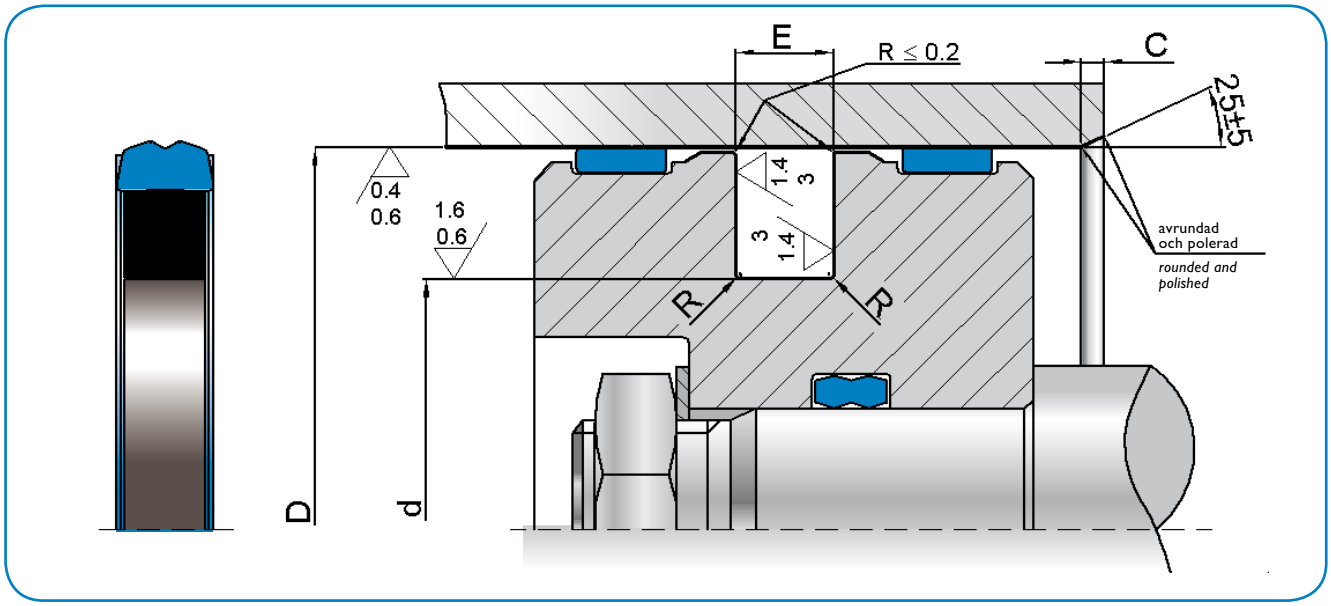

PSA
PAE
PSH
RR
PSO
PSQ
TPD
KDSA
KDSB
KDSP
KDAE

	D_{H9}	d_{h9}	$E_{+0,2}$	C	R	ART.NR. / *ITEM*
	40,0	24,5	6,3	5,0	0,4	PSQ 0400 0245 063 CN
*	40,0	29,0	4,2	4,0	0,3	PSQ 0400 0290 042 CN
	45,0	34,0	4,2	4,0	0,3	PSQ 0450 0340 042 CN
*	50,0	34,5	6,3	5,0	0,4	PSQ 0500 0345 063 CN
*	50,0	39,0	4,2	4,0	0,3	PSQ 0500 0390 042 CN
	55,0	39,5	6,3	5,0	0,4	PSQ 0550 0395 063 CN
	60,0	44,5	6,3	5,0	0,4	PSQ 0600 0445 063 CN
	60,0	49,0	4,2	4,0	0,3	PSQ 0600 0490 042 CN
*	63,0	47,5	6,3	5,0	0,4	PSQ 0630 0475 063 CN
*	63,0	52,0	4,2	5,0	0,3	PSQ 0630 0520 042 CN
	65,0	49,5	6,3	4,0	0,4	PSQ 0650 0495 063 CN
	70,0	54,5	6,3	5,0	0,4	PSQ 0700 0545 063 CN
	70,0	59,0	4,2	4,0	0,3	PSQ 0700 0590 042 CN
	75,0	59,5	6,3	5,0	0,4	PSQ 0750 0595 063 CN
	80,0	59,0	8,1	6,0	0,4	PSQ 0800 0590 081 CN

* ISO 7425

	D_{H9}	d_{h9}	$E_{+0,2}$	C	R	ART.NR. / *ITEM*
*	80,0	64,5	6,3	5,0	0,4	PSQ 0800 0645 063 CN
	85,0	69,5	6,3	5,0	0,4	PSQ 0850 0695 063 CN
	90,0	69,0	8,1	6,0	0,4	PSQ 0900 0690 081 CN
	90,0	74,5	6,3	5,0	0,4	PSQ 0900 0745 063 CN
	95,0	79,5	6,3	5,0	0,4	PSQ 0950 0795 063 CN
	100,0	79,0	8,1	6,0	0,4	PSQ 1000 0790 081 CN
*	100,0	84,5	6,3	5,0	0,4	PSQ 1000 0845 063 CN
	105,0	89,5	6,3	5,0	0,4	PSQ 1050 0895 063 CN
	110,0	89,0	8,1	6,0	0,4	PSQ 1100 0890 081 CN
	110,0	94,5	6,3	5,0	0,4	PSQ 1100 0945 063 CN
	115,0	94,0	8,1	6,0	0,4	PSQ 1150 0940 081 CN
	120,0	99,0	8,1	6,0	0,4	PSQ 1200 0990 081 CN
*	125,0	104,0	8,1	6,0	0,4	PSQ 1250 1040 081 CN
*	125,0	109,5	6,3	5,0	0,4	PSQ 1250 1095 063 CN
	130,0	109,0	8,1	6,0	0,4	PSQ 1300 1090 081 CN

OBS: Kontakta vår tekniska avdelning för dimensioner som inte finns i katalogen.
Remark: please contact our technical dept. for further dimensions not included in the catalogue.

TPD

KOLVTÄTNING TYP TPD

Beskrivning

Kolvtätning typ TPD består av två ringar. Den dynamiska tätningen är en fylld PTFE-ring med lämplig utformning, den statiska tätningen är en O-ring som även fungerar som förspänning.

Tekniska data

Tryck:	<600 bar
Hastighet:	<15 m/s
Temperatur:	från -30 °C till +100 °C, med toppar upp till 120 °C för standardtypen med O-ringar av nitril. För andra temperaturer bör O-ringen bytas till en lämpligare modell.

Material

Bronsfylld PTFE för standardtypen, NBR för O-ringen.
Materialreferens: TN

TPD TYPE PISTON SEAL

Description

The TPD piston seal is composed of two rings. The dynamic seal is a filled PTFE ring with the required shape, the static seal is an O-Ring also working as energizer.

Technical data

Pressure:	*<600 bar*
Speed:	*<15 m/s*
Temperature:	*from - 30 °C up to + 100 °C for the standard type with nitrile OR. Short peaks till 120 °C. For a different temperature range, the O-Ring should be replaced by a more suitable model*

Material

Bronze-filled PTFE for the standard type, and NBR for the O-Ring.
Compound reference: TN

TPD

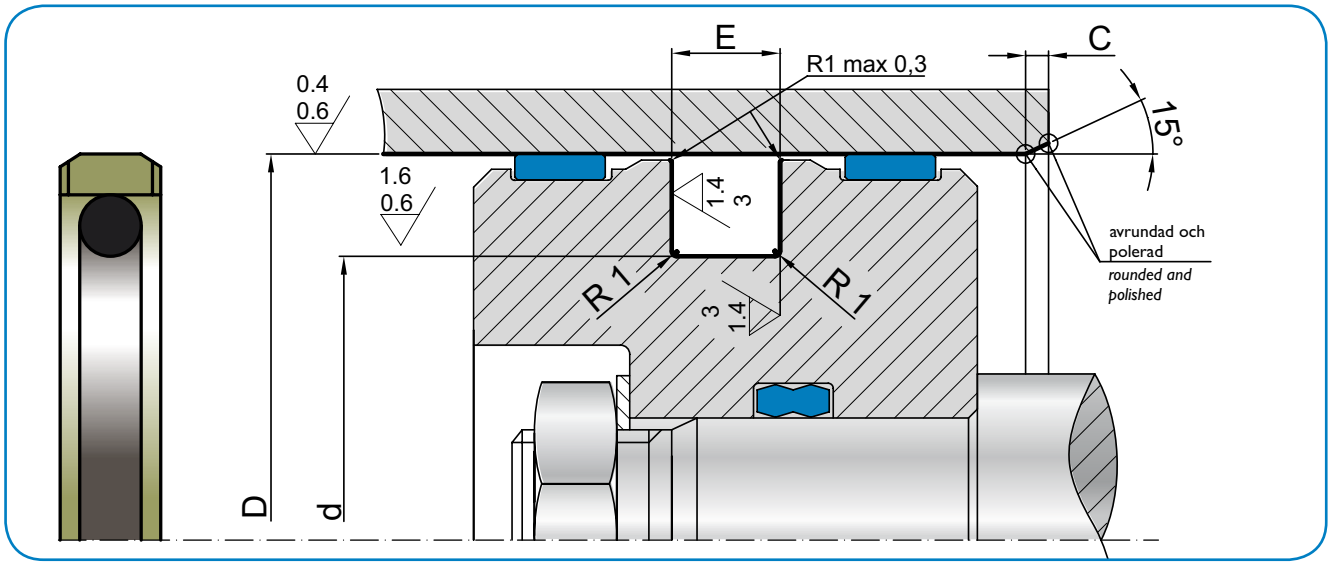

D	d	E	O-Ring	C	ART.NR. / ITEM
8,0	3,1	2,2	006	5,0	TPD 0080 0031 022 TN
10,0	5,1	2,2	008	5,0	TPD 0100 0051 022 TN
12,0	7,1	2,2	010	5,0	TPD 0120 0071 022 TN
15,0	7,5	3,2	108	5,0	TPD 0150 0075 032 TN
16,0	8,5	3,2	109	5,0	TPD 0160 0085 032 TN
18,0	10,5	3,2	110	5,0	TPD 0180 0105 032 TN
20,0	12,5	3,2	111	5,0	TPD 0200 0125 032 TN
22,0	14,5	3,2	113	5,0	TPD 0220 0145 032 TN
24,0	16,5	3,2	114	5,0	TPD 0240 0165 032 TN
25,0	17,5	3,2	115	5,0	TPD 0250 0175 032 TN
28,0	20,5	3,2	116	5,0	TPD 0280 0205 032 TN
30,0	22,5	3,2	118	5,0	TPD 0300 0225 032 TN
32,0	24,5	3,2	119	5,0	TPD 0320 0245 032 TN
35,0	27,5	3,2	121	5,0	TPD 0350 0275 032 TN
39,0	31,5	3,2	124	5,0	TPD 0390 0315 032 TN
40,0	29,0	4,2	216	5,0	TPD 0400 0290 042 TN
42,0	31,0	4,2	217	5,0	TPD 0420 0310 042 TN
45,0	34,0	4,2	219	5,0	TPD 0450 0340 042 TN
48,0	37,0	4,2	221	5,0	TPD 0480 0370 042 TN
50,0	39,0	4,2	222	5,0	TPD 0500 0390 042 TN
52,0	41,0	4,2	223	5,0	TPD 0520 0410 042 TN
55,0	44,0	4,2	224	5,0	TPD 0550 0440 042 TN
60,0	49,0	4,2	225	5,0	TPD 0600 0490 042 TN
63,0	52,0	4,2	226	5,0	TPD 0630 0520 042 TN
65,0	54,0	4,2	227	5,0	TPD 0650 0540 042 TN
70,0	59,0	4,2	228	5,0	TPD 0700 0590 042 TN
75,0	64,0	4,2	230	5,0	TPD 0750 0640 042 TN
80,0	64,5	6,3	333	5,0	TPD 0800 0645 063 TN
85,0	69,5	6,3	335	5,0	TPD 0850 0695 063 TN
90,0	74,5	6,3	336	5,0	TPD 0900 0745 063 TN

D	d	E	O-Ring	C	ART.NR. / ITEM
100,0	84,5	6,3	339	5,0	TPD 1000 0845 063 TN
105,0	89,5	6,3	341	7,0	TPD 1050 0895 063 TN
110,0	94,5	6,3	343	7,0	TPD 1100 0945 063 TN
115,0	99,5	6,3	344	7,0	TPD 1150 0995 063 TN
120,0	104,5	6,3	346	7,0	TPD 1200 1045 063 TN
125,0	109,5	6,3	347	7,0	TPD 1250 1095 063 TN
130,0	114,5	6,3	349	7,0	TPD 1300 1145 063 TN
135,0	114,0	8,1	425	7,0	TPD 1350 1140 081 TN
140,0	119,0	8,1	426	7,0	TPD 1400 1190 081 TN
145,0	124,0	8,1	428	7,0	TPD 1450 1240 081 TN
150,0	129,0	8,1	429	7,0	TPD 1500 1290 081 TN
160,0	139,0	8,1	433	7,0	TPD 1600 1390 081 TN
170,0	149,0	8,1	436	7,0	TPD 1700 1490 081 TN
180,0	159,0	8,1	438	7,0	TPD 1800 1590 081 TN
190,0	169,0	8,1	439	7,0	TPD 1900 1690 081 TN
200,0	179,0	8,1	441	7,0	TPD 2000 1790 081 TN
210,0	189,0	8,1	442	10,0	TPD 2100 1890 081 TN
220,0	199,0	8,1	444	10,0	TPD 2200 1990 081 TN
230,0	209,0	8,1	445	10,0	TPD 2300 2090 081 TN
240,0	219,0	8,1	446	10,0	TPD 2400 2190 081 TN
250,0	229,0	8,1	447	10,0	TPD 2500 2290 081 TN
260,0	239,0	8,1	447	10,0	TPD 2600 2390 081 TN
270,0	249,0	8,1	448	10,0	TPD 2700 2490 081 TN
280,0	259,0	8,1	449	10,0	TPD 2800 2590 081 TN
290,0	269,0	8,1	450	10,0	TPD 2900 2690 081 TN
300,0	279,0	8,1	451	10,0	TPD 3000 2790 081 TN

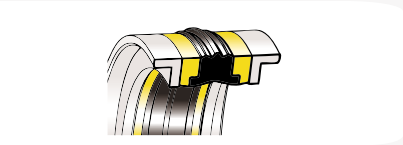

KDSA

KOMPAKT KOLVTÄTNING TYP KDSA

Beskrivning

Kompakta kolvtätningar typ KDSA består av en central enhet av NBR fungerande som tätning, två sidostöd fungerande som anti-extrusionsringar samt två yttre styrband som styr kolven i cylindern.

Tekniska data

Tryck:	från 0 till 300 bar med toppar upp till 400 bar vid 60 °C
Hastighet:	<0,5 m/s
Temperatur:	från -30 °C till +100 °C
Vätskor:	mineraloljor (se tabell 1 på sida 12)

Material

Materialen för denna typ av tätning är:

- Centraleheten av NBR, 70 Shore A±3
- Sidostöden av termoplastisk elastomer (TPE)
- Yttre styrringar av polyacetalharts (POM)

Materialreferens: CX

Montage

Montage av denna tätning kan ske i ett slutet spår i en hel kolv, eller i ett öppet spår i en tvådelad kolv.
Montage måste ske i följande ordning:
- Gummielement;
- Stöd;
- Styrringar.

Det får inte finnas mekaniska bearbetningsgrader kvar på kolven som kan skada gummielementet under montage.

KDSA TYPE COMPACT PISTON SEAL

Description

The KDSA compact seal is made of a central unit made of NBR working as a seal, two side supports, working as anti-extrusion ring, and two external guide rings, keeping aligned the piston in the cylinder.

Technical data

Pressure:	*from 0 to 300 bar with peaks till 400 bar at 60 °C*
Speed:	*<0.5 m/s*
Temperature:	*from - 30 °C at +100 °C*
Fluids:	*Mineral oils (see table 1, page 12)*

Material

The compounds used to manufacture this seal type are:

- *The central units is made of NBR, the hardness is 70 Shore A ± 3*
- *The sides support are made of thermoplastic elastomer (TPE)*
- *The external wear rings are made of polyacetalic resin (POM)*

Compound reference: CX

Assembly

The assembly of this seal can be carried out in either closed groove in a mono-block piston, or in open groove in a two-parts piston.
The assembly has to be done as follows:
- *Rubber element;*
- *Supports;*
- *Wear rings.*

The piston must not have machining scores which may damage the rubber unit during the installation.

KDSA

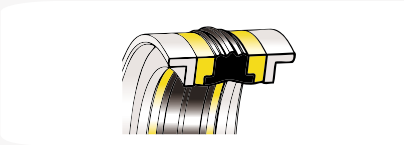

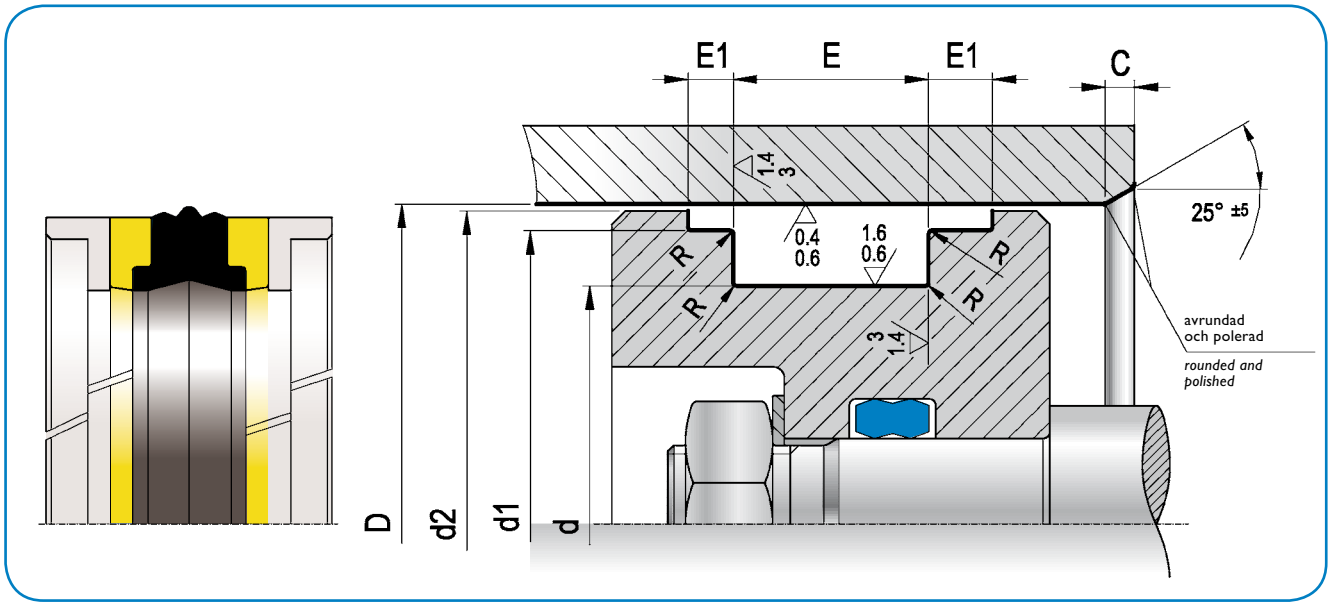

D_{H9}	d_{h9}	$E_{+0,2}$	d_{1h9}	$d_{2\pm0,2}$	$E_{1\ 0/+0,1}$	R	C	ART.NR. / *ITEM*
32,0	24,0	15,5	28,0	31,4	3,2	0,4	3,5	KDSA 0320 0240 155 CX
40,0	32,0	15,5	36,0	39,4	3,2	0,4	4,0	KDSA 0400 0320 155 CX
50,0	38,0	20,5	46,0	49,4	4,2	0,4	4,0	KDSA 0500 0380 205 CX
60,0	48,0	20,5	56,0	59,4	4,2	0,4	4,5	KDSA 0600 0480 205 CX
63,0	51,0	20,5	59,0	62,4	4,2	0,4	4,5	KDSA 0630 0510 205 CX
70,0	58,0	20,5	66,0	69,4	4,2	0,4	4,5	KDSA 0700 0580 205 CX
80,0	66,0	22,5	76,0	79,4	5,2	0,4	4,5	KDSA 0800 0660 225 CX
90,0	76,0	22,5	86,0	89,4	5,2	0,4	4,5	KDSA 0900 0760 225 CX
100,0	86,0	22,5	96,0	99,4	5,2	0,4	5,0	KDSA 1000 0860 225 CX
110,0	96,0	22,5	106,0	109,4	5,2	0,4	5,0	KDSA 1100 0960 225 CX
120,0	106,0	22,5	116,0	119,4	5,2	0,8	5,0	KDSA 1200 1060 225 CX
125,0	108,0	26,5	121,0	124,4	7,2	0,8	5,0	KDSA 1250 1080 265 CX
130,0	113,0	26,5	126,0	129,4	7,2	0,8	5,0	KDSA 1300 1130 265 CX
140,0	123,0	26,5	136,0	139,4	7,2	0,8	5,0	KDSA 1400 1230 265 CX
150,0	133,0	26,5	146,0	149,4	7,2	0,8	5,0	KDSA 1500 1330 265 CX
160,0	143,0	26,5	156,0	159,4	7,2	0,8	5,0	KDSA 1600 1430 265 CX

OBS: Kontakta vår tekniska avdelning för dimensioner som inte finns i katalogen.
Remark: please contact our technical dept. for further dimensions not included in the catalogue.

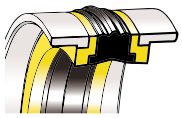

KDSB

KOMPAKT KOLVTÄTNING TYP KDSB

Beskrivning

Kompakta kolvtätningar typ KDSB består av en central enhet av NBR fungerande som tätning, två sidostöd fungerande som anti-extrusionsringar samt två yttre styrband som styr kolven i cylindern.

Tekniska data

Tryck:	från 0 till 300 bar med toppar upp till a 400 bar vid 60 °C
Hastighet:	<0,5 m/s
Temperatur:	från -30 °C till +100 °C
Vätskor:	mineraloljor (se tabell 1 på sida 12)

Material

Materialen för denna typ av tätning är:

- Centraleheten av NBR, 70 Shore A±3
- Sidostöden av termoplastisk elastomer (TPE)
- Yttre styrringar av polyacetalharts (POM)

Materialreferens: CX

Montage

Montage av denna tätning kan ske i ett slutet spår i en kolv gjord av en del, eller i ett öppet spår i en tvådelad kolv.
Montage måste ske i följande ordning:

- Gummielement;
- Stöd;
- Styrringar.

Det får inte finnas mekaniska bearbetningsgrader kvar på kolven som kan skada gummielementet under montage.

KDSB TYPE COMPACT PISTON SEAL

Description

The KDSB compact seal is made of a central unit in NBR working as a seal, two side supports, working as anti-extrusion ring, and two external guide rings, keeping aligned the piston in the cylinder.

Technical data

Pressure:	*from 0 to 300 bar with peaks till 400 bar at 60 °C*
Speed:	*<0.5 m/s*
Temperature:	*from - 30 °C at +100 °C*
Fluids:	*Mineral oils (see table 1, page 12)*

Material

The compounds used to manufacture this seal type are the following:

- *The central units is made of NBR, the hardness is 70 Shore A ± 3*
- *The sides support are made of a thermoplastic elastomer (TPE)*
- *The external wear rings are made of polyacetalic resin (POM)*

Compound reference: CX

Assembly

The assembly of this seal can be carried out in either closed groove in a mono-block piston, or in open groove in a two-parts piston.
The assembly has to be done as follows:

- *Rubber element;*
- *Supports;*
- *Wear rings.*

Avoid machining scores on the piston which may damage the rubber unit during the installation.

KDSB

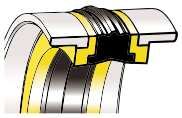

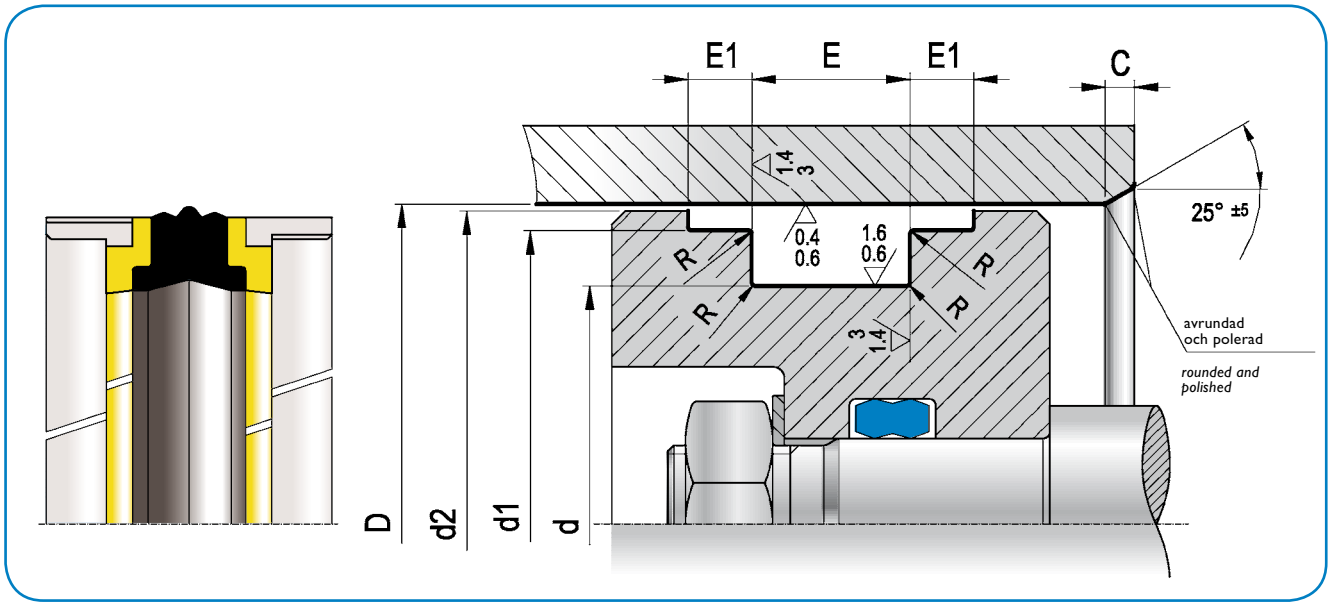

D_{H9}	d_{h9}	$E_{+0,2}$	d_{1h9}	$d_{2\pm0,2}$	$E_{1\ 0/+0,1}$	R	C	ART.NR. / *ITEM*
20,0	11,0	13,5	17,00	19,0	2,10	0,4	3,5	KDSB 0200 0110 135 CX
22,0	13,0	13,5	19,00	21,0	2,10	0,4	3,5	KDSB 0220 0130 135 CX
25,0	15,0	12,0	21,00	23,0	4,00	0,4	3,5	KDSB 0250 0150 120 CX
25,0	15,0	12,5	22,00	24,0	4,00	0,4	3,5	KDSB 0250 0150 125 CX
25,0	15,0	16,4	21,45	23,5	6,35	0,4	3,5	KDSB 0250 0150 164 CX
25,0	16,0	13,5	22,00	24,0	2,10	0,4	3,5	KDSB 0250 0160 135 CX
28,0	19,0	13,5	25,00	27,0	2,10	0,4	3,5	KDSB 0280 0190 135 CX
30,0	21,0	13,5	27,00	29,0	2,10	0,4	3,5	KDSB 0300 0210 135 CX
32,0	22,0	15,5	28,00	31,0	2,60	0,4	3,5	KDSB 0320 0220 155 CX
32,0	22,0	16,4	28,50	30,5	6,35	0,4	3,5	KDSB 0320 0220 164 CX
35,0	25,0	15,5	31,00	34,0	2,60	0,4	3,5	KDSB 0350 0250 155 CX
35,0	25,0	16,4	31,40	33,5	6,35	0,4	3,5	KDSB 0350 0250 164 CX
40,0	24,0	18,4	35,40	38,5	6,35	0,4	4,0	KDSB 0400 0240 184 CX
40,0	26,0	15,5	36,00	39,0	2,60	0,4	4,0	KDSB 0400 0260 155 CX
40,0	30,0	12,5	36,00	38,0	4,00	0,4	4,0	KDSB 0400 0300 125 CX
40,0	30,0	16,4	35,40	38,5	6,35	0,4	4,0	KDSB 0400 0300 164 CX
42,0	28,0	15,5	38,00	41,0	2,60	0,4	4,0	KDSB 0420 0280 155 CX
45,0	29,0	18,4	40,40	43,5	6,35	0,4	4,0	KDSB 0450 0290 184 CX
45,0	31,0	15,5	41,00	44,0	2,60	0,4	4,0	KDSB 0450 0310 155 CX
45,0	35,0	16,4	40,40	43,5	6,35	0,4	4,0	KDSB 0450 0350 164 CX
50,0	34,0	18,4	45,40	48,5	6,35	0,4	4,0	KDSB 0500 0340 184 CX
50,0	34,0	20,5	46,00	49,0	3,10	0,4	4,0	KDSB 0500 0340 205 CX
55,0	39,0	18,4	50,36	53,5	6,35	0,4	4,0	KDSB 0550 0390 184 CX
55,0	39,0	20,5	51,00	54,0	3,10	0,4	4,0	KDSB 0550 0390 205 CX
56,0	40,0	20,5	52,00	55,0	3,10	0,4	4,0	KDSB 0560 0400 205 CX
60,0	44,0	18,4	55,40	58,5	6,35	0,4	4,5	KDSB 0600 0440 184 CX
60,0	44,0	20,5	56,00	59,0	3,10	0,4	4,5	KDSB 0600 0440 205 CX

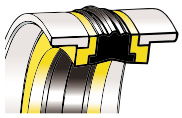

KDSB

D_{H9}	d_{h9}	$E_{+0,2}$	d_{1h9}	$d_{2\pm0,2}$	$E_{1\ 0/+0,1}$	R	C	ART.NR. / *ITEM*
63,0	47,0	18,4	58,40	61,5	6,35	0,4	4,5	KDSB 0630 0470 184 CX
63,0	47,0	19,4	58,40	61,5	6,35	0,4	4,5	KDSB 0630 0470 194 CX
63,0	47,0	20,5	59,00	62,0	3,10	0,4	4,5	KDSB 0630 0470 205 CX
65,0	49,0	20,5	61,00	64,0	3,10	0,4	4,5	KDSB 0650 0490 205 CX
65,0	50,0	18,4	60,40	63,5	6,35	0,4	4,5	KDSB 0650 0500 184 CX
70,0	50,0	22,4	64,20	68,3	6,35	0,4	4,5	KDSB 0700 0500 224 CX
70,0	54,0	20,5	66,00	69,0	3,10	0,4	4,5	KDSB 0700 0540 205 CX
75,0	55,0	22,4	69,20	73,3	6,35	0,4	4,5	KDSB 0750 0550 224 CX
75,0	59,0	20,5	71,00	74,0	3,10	0,4	4,5	KDSB 0750 0590 205 CX
80,0	60,0	22,4	74,15	78,3	6,35	0,4	4,5	KDSB 0800 0600 224 CX
80,0	62,0	22,5	76,00	79,0	3,60	0,4	4,5	KDSB 0800 0620 225 CX
85,0	65,0	22,4	79,15	83,3	6,35	0,4	4,5	KDSB 0850 0650 224 CX
90,0	70,0	22,4	84,15	88,3	6,35	0,4	4,5	KDSB 0900 0700 224 CX
90,0	72,0	22,5	86,00	89,0	3,60	0,4	4,5	KDSB 0900 0720 225 CX
95,0	75,0	22,4	89,15	93,3	6,35	0,4	4,5	KDSB 0950 0750 224 CX
100,0	75,0	22,4	93,15	98,0	6,35	0,4	5,0	KDSB 1000 0750 224 CX
100,0	82,0	22,5	96,00	99,0	3,60	0,4	5,0	KDSB 1000 0820 225 CX
105,0	80,0	22,4	98,10	103,0	6,35	0,4	5,0	KDSB 1050 0800 224 CX
110,0	85,0	22,4	103,10	108,0	6,35	0,4	5,0	KDSB 1100 0850 224 CX
110,0	92,0	22,5	106,00	109,0	3,60	0,4	5,0	KDSB 1100 0920 225 CX
115,0	90,0	22,4	108,10	113,0	6,35	0,4	5,0	KDSB 1150 0900 224 CX
115,0	97,0	22,5	111,00	114,0	3,60	0,4	5,0	KDSB 1150 0970 225 CX
120,0	95,0	22,4	113,10	118,1	6,35	0,8	5,0	KDSB 1200 0950 224 CX
125,0	100,0	25,4	118,10	123,0	6,35	0,8	5,0	KDSB 1250 1000 254 CX
125,0	103,0	26,5	121,00	124,0	5,10	0,8	5,0	KDSB 1250 1030 265 CX
130,0	105,0	25,4	122,60	127,5	9,50	0,8	5,0	KDSB 1300 1050 254 CX
130,0	105,0	25,4	123,10	128,0	6,35	0,8	5,0	KDSB1 1300 1050 254 CX
135,0	110,0	25,4	127,60	132,5	9,50	0,8	5,0	KDSB 1350 1100 254 CX
135,0	110,0	25,4	128,10	133,0	6,35	0,8	5,0	KDSB1 1350 1100 254 CX
140,0	115,0	25,4	132,60	137,5	9,50	0,8	5,0	KDSB 1400 1150 254 CX
140,0	115,0	25,4	133,00	138,0	6,35	0,8	5,0	KDSB1 1400 1150 254 CX
140,0	118,0	26,5	136,00	139,0	5,10	0,8	5,0	KDSB 1400 1180 265 CX
145,0	120,0	25,4	137,60	142,5	9,50	0,8	5,0	KDSB 1450 1200 254 CX
145,0	120,0	25,4	138,30	143,0	6,35	0,8	5,0	KDSB1 1450 1200 254 CX
150,0	125,0	25,4	142,60	147,5	9,50	0,8	5,0	KDSB 1500 1250 254 CX
150,0	125,0	25,4	143,00	148,0	6,35	0,8	5,0	KDSB1 1500 1250 254 CX
150,0	128,0	26,5	146,00	149,0	5,10	0,8	5,0	KDSB 1500 1280 265 CX
155,0	130,0	25,4	147,60	152,5	9,50	0,8	5,0	KDSB 1550 1300 254 CX
155,0	130,0	25,4	148,00	153,0	6,35	0,8	5,0	KDSB1 1550 1300 254 CX
160,0	130,0	25,4	153,00	157,5	6,35	0,8	5,0	KDSB1 1600 1300 254 CX
160,0	130,0	25,4	152,60	157,5	9,50	0,8	5,0	KDSB 1600 1300 254 CX
160,0	135,0	25,4	152,60	157,5	9,50	0,8	5,0	KDSB 1600 1350 254 CX
160,0	138,0	26,5	156,00	159,0	5,10	0,8	5,0	KDSB 1600 1380 265 CX
165,0	140,0	25,4	157,60	162,5	9,50	0,8	5,0	KDSB 1650 1400 254 CX
170,0	145,0	25,4	161,70	167,1	12,70	0,8	5,0	KDSB 1700 1450 254 CX

KDSB

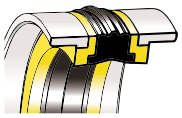

D_{H9}	d_{h9}	$E_{+0,2}$	d_{1h9}	$d_{2\pm0,2}$	$E_{1\ 0/+0,1}$	R	C	ART.NR. / *ITEM*
170,0	148,0	26,5	166,00	169,0	5,10	0,8	5,0	KDSB 1700 1480 265 CX
175,0	150,0	25,4	166,70	172,1	12,70	0,8	5,0	KDSB 1750 1500 254 CX
180,0	150,0	35,4	172,95	177,9	6,35	0,8	5,0	KDSB 1800 1500 354 CX
180,0	155,0	25,4	171,70	177,1	12,70	0,8	5,0	KDSB 1800 1550 254 CX
185,0	160,0	25,4	176,70	182,1	12,70	0,8	5,0	KDSB 1850 1600 254 CX
190,0	165,0	25,4	181,70	187,0	12,70	0,8	5,0	KDSB 1900 1650 254 CX
195,0	170,0	25,4	186,70	192,0	12,70	0,8	5,0	KDSB 1950 1700 254 CX
200,0	175,0	25,4	191,60	197,0	12,70	0,8	6,0	KDSB 2000 1750 254 CX
210,0	185,0	25,4	201,60	207,0	12,70	0,8	6,0	KDSB 2100 1850 254 CX
220,0	190,0	35,4	212,70	217,9	6,35	0,8	6,0	KDSB 2200 1900 354 CX
220,0	195,0	25,4	211,60	217,0	12,70	0,8	6,0	KDSB 2200 1950 254 CX
230,0	205,0	25,4	221,60	227,0	12,70	0,8	6,0	KDSB 2300 2050 254 CX
240,0	215,0	25,4	231,60	237,0	12,70	0,8	6,0	KDSB 2400 2150 254 CX
250,0	220,0	35,4	242,90	247,9	6,35	0,8	6,0	KDSB 2500 2200 354 CX
250,0	225,0	25,4	241,60	247,0	12,70	0,8	6,0	KDSB 2500 2250 254 CX

OBS: Kontakta vår tekniska avdelning för dimensioner som inte finns i katalogen.
Remark: please contact our technical dept. for further dimensions not included in the catalogue.

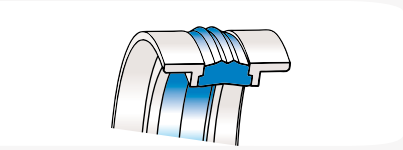

KDSP

KOMPAKT KOLVTÄTNING TYP KDSP

Beskrivning

Tätningar typ KDSP har utformats som en kolvtätning med utbytbara säten ISO 6547.
Den består av endast tre delar: en tätning av polyuretan i mitten och två avstrykarringar av glasfiberfylld polyacetalharts på sidorna.
Det här systemet behöver inga anti-extrusionsringar tack vare en hög elasticitetsfaktor och att centralelementet har en högre hårdhet än nitrilgummi (NBR).
Friktionen är låg tack vare tätningens speciella geometriska form.

Tekniska data

Tryck:	från 0 till 300 Bar med toppar upp till 400 Bar vid 60 °C.
Hastighet:	0,8 m/s
Temperatur:	från -30 °C till +100 °C
Vätskor:	mineraloljor (se tabell 1 på sida 12)

Material

Materialen för denna typ av tätning är:

- centralelementet i polyuretan, 93 Shore A, materialreferens C0
- sidoelement i glasfylld polyacetalharts (POM)

Materialreferens: CX

Montage

Montage av denna tätning kan ske i ett slutet spår i en hel kolv, eller i ett öppet spår i en tvådelad kolv.
Det får inte finnas mekaniska bearbetningsgrader kvar på kolven som kan skada gummielementet under montage.

KDSP TYPE COMPACT PISTON SEAL

Description

The KDSP seal is designed to be a piston seal with interchangeable seats ISO 6547.
It consists of only three elements: a polyurethane seal at the middle and two side wiper rings in glass-filled polyacetal resin.
This system doesn't need anti-extrusion supports, Thanks to the high modulus of elasticity and the hardness of the central element higher hardness then Nitrile rubber NBR.
The friction (first operation and in working condition) is low thanks to the particular geometric shape of the seal.

Technical data

Pressure:	*from 0 to 300 Bar with peaks up to 400 Bar at 60 °C.*
Speed:	*0.8 m/s*
Temperature:	*from – 30 °C to + 100 °C*
Fluids:	*mineral oils (see table 1, page 12)*

Material

The materials used for the construction of this type of seal are:

- *polyurethane for the central element, hardness 93 Shore A, compound reference C0*
- *glass-filled polyacetal resin (POM) for the side elements*

Compound reference: CX

Assembly

This seal can be assembled both in closed groove on a mono-block piston and in open groove on a two-part piston.
Avoid machining scores on the piston which may damage the sealing during the installation.

KDSP

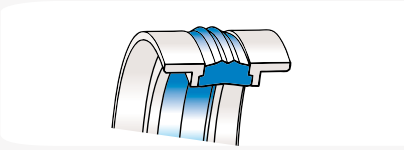

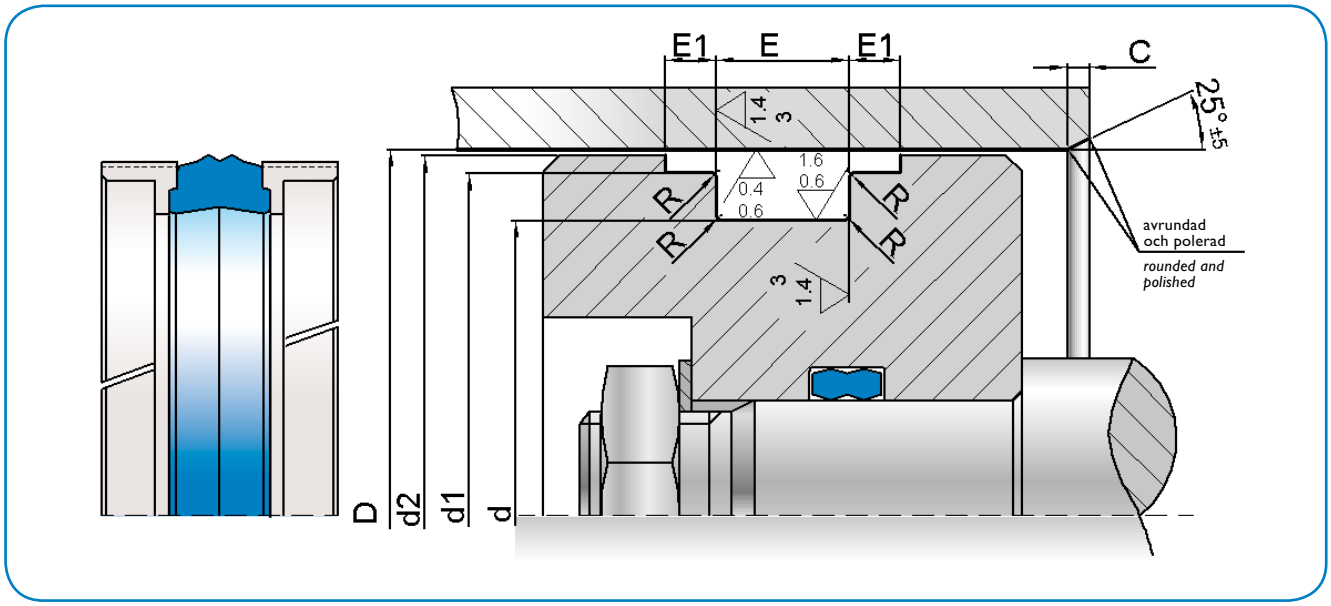

	D_{H9}	d_{h9}	$E_{+0,2}$	d_{1h9}	$d_{2\pm0,2}$	$E_{1\ 0/+0,1}$	R	C	ART.NR. / *ITEM*
*	25,0	15,0	12,5	22,0	24,0	4,0	0,4	5,0	KDSP 0250 0150 125 CX
*	25,0	17,0	10,0	22,0	24,0	4,0	0,4	5,0	KDSP 0250 0170 100 CX
*	32,0	22,0	12,5	29,0	31,0	4,0	0,4	5,0	KDSP 0320 0220 125 CX
*	32,0	24,0	10,0	29,0	31,0	4,0	0,4	5,0	KDSP 0320 0240 100 CX
*	40,0	30,0	12,5	36,0	38,0	4,0	0,4	5,0	KDSP 0400 0300 125 CX
*	40,0	32,0	10,0	37,0	39,0	4,0	0,4	5,0	KDSP 0400 0320 100 CX
*	50,0	35,0	20,0	46,0	48,5	5,0	0,4	5,0	KDSP 0500 0350 200 CX
*	50,0	40,0	12,5	47,0	49,0	4,0	0,4	5,0	KDSP 0500 0400 125 CX
*	55,0	45,0	12,5	52,0	54,0	4,0	0,4	5,0	KDSP 0550 0450 125 CX
*	63,0	48,0	20,0	59,0	62,0	5,0	0,4	5,0	KDSP 0630 0480 200 CX
*	63,0	53,0	12,5	60,0	62,0	4,0	0,4	5,0	KDSP 0630 0530 125 CX
*	70,0	55,0	20,0	66,0	68,5	5,0	0,4	5,0	KDSP 0700 0550 200 CX
	70,0	60,0	12,5	67,0	69,0	4,0	0,4	5,0	KDSP 0700 0600 125 CX
*	80,0	65,0	20,0	76,0	78,5	5,0	0,4	5,0	KDSP 0800 0650 200 CX
	80,0	70,0	12,5	77,0	79,0	4,0	0,4	5,0	KDSP 0800 0700 125 CX
*	90,0	75,0	20,0	86,0	88,5	5,0	0,4	5,0	KDSP 0900 0750 200 CX
	90,0	80,0	12,5	86,0	88,5	5,0	0,4	5,0	KDSP 0900 0800 125 CX
*	100,0	85,0	20,0	96,0	98,5	5,0	0,4	5,0	KDSP 1000 0850 200 CX
	100,0	90,0	12,5	96,0	98,5	5,0	0,4	5,0	KDSP 1000 0900 125 CX

* ISO 6547

OBS: Kontakta vår tekniska avdelning för dimensioner som inte finns i katalogen.
Remark: please contact our technical dept. for further dimensions not included in the catalogue.

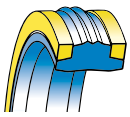

KDAE

KOMPAKT KOLVTÄTNING TYP KDAE

Beskrivning

Kompakta kolvtätningar typ KDAE är utformade med ett centralelement i polyuretan och två anti-extrusionsringar på sidorna.
Sammansättningen av polyuretanelementet med hög elasticitetsfaktor och de två ringarna i elastomer med hög hårdhet ökar tätningens stabilitet även i tunga applikationer.
Polyuretan ger också miskat slitage i jämförelse med gummi och ökar därför tätningens livslängd.
Friktionen är låg tack vare tätningens speciella geometriska form och har bättre prestanda än NBR.

Tekniska data

Tryck:	från 0 till 400 bar
Hastighet:	<0,8 m/s
Temperatur:	från -30 °C till +100 °C med toppar upp till 110 °C
Vätskor:	mineraloljor (se tabell 1 på sida 12)

Material

Materialen för denna typ av tätning är:

- centralelementet i polyuretan, 93 Shore A, materialreferens C0
- stödringar i TPE elastomer 63 Shore D (L2).

Materialreferens: CR

Montage

Montage av denna tätning kan ske i ett slutet spår i en hel kolv, eller i ett öppet spår i en tvådelad kolv.
Det får inte finnas mekaniska bearbetningsgrader kvar på kolven som kan skada gummielementet under montage.
Vi rekommenderar infettning av kolven för enklare montage.

KDAE TYPE COMPACT PISTON SEAL

Description

The KDAE compact piston seal series type is designed with a central polyurethane element and two side anti-extrusion rings.
The assembly between the polyurethane element with high elastic modulus and the two elastomer rings with high hardness enhances stability of the sealing even at heavy duty applications.
Compared to rubber, the abrasion is also reduced due to the use of polyurethane, therefore extending the life of the seal.
The friction (first operation and in working condition) is also considerably reduced, due to geometric shape of the seal, having better performance than NBR.

Technical data

Pressure:	*from 0 to 400 bar*
Speed:	*<0.8 m/s*
Temperature:	*from – 30 °C to + 100 °C with peaks up to + 110 °C*
Fluids:	*mineral oils (see table 1, page 12)*

Material

The materials used for the construction of this type of seal are:

- *polyurethane for the central element, hardness 93 Shore A (C0)*
- *the backup rings in TPE elastomer 63 Shore D (L2).*

Compound reference: CR

Assembly

This seal can be assembled both in closed groove on a mono-block piston and in open groove on a two-part piston.
Avoid machining scores on the piston which may damage the sealing during the installation.
The use of grease in the piston is recommended for easier assembly.

KDAE

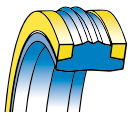

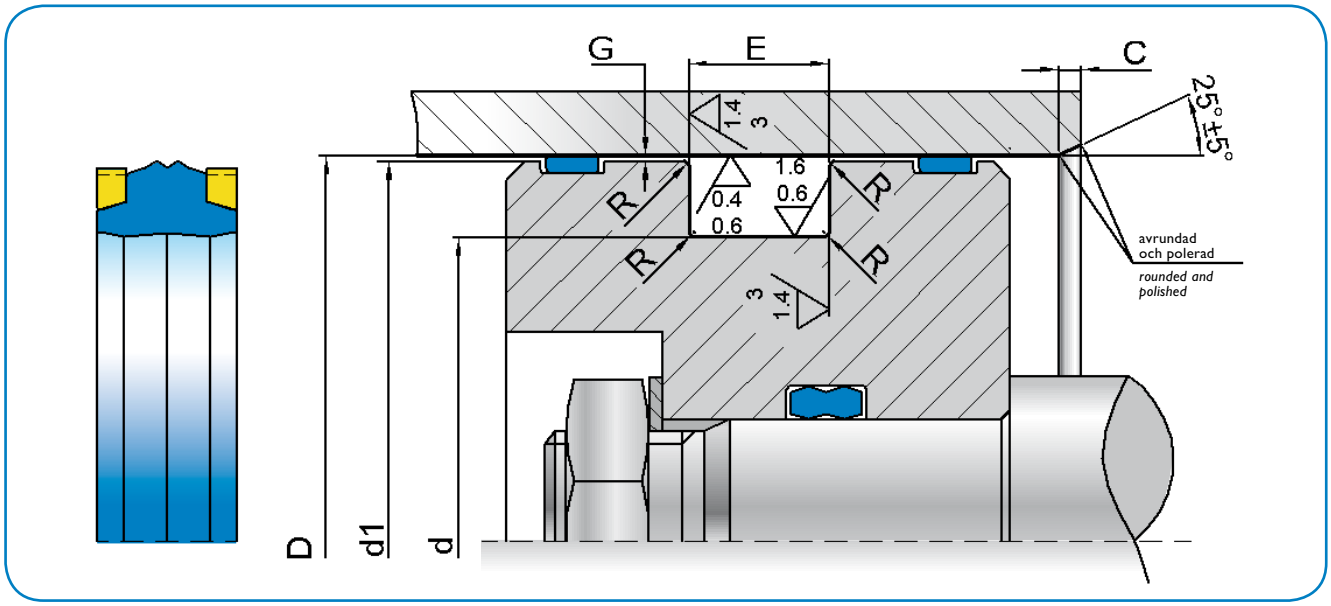

D_{H9}	d_{h9}	$E_{+0,2}$	C	ART.NR. / *ITEM*
50,0	36,0	9,0	4,0	KDAE 0500 0360 090 CR
50,0	38,0	10,0	4,0	KDAE 0500 0380 100 CR
55,0	41,0	9,0	4,0	KDAE 0550 0410 090 CR
60,0	46,0	9,0	4,0	KDAE 0600 0460 090 CR
63,0	48,0	11,0	4,0	KDAE 0630 0480 110 CR
63,0	51,0	10,0	4,0	KDAE 0630 0510 100 CR
65,0	50,0	11,0	4,0	KDAE 0650 0500 110 CR
70,0	53,0	14,0	4,0	KDAE 0700 0530 140 CR
70,0	55,0	11,0	4,0	KDAE 0700 0550 110 CR
75,0	60,0	11,0	4,0	KDAE 0750 0600 110 CR
80,0	63,0	14,0	4,0	KDAE 0800 0630 140 CR
80,0	65,0	11,0	4,0	KDAE 0800 0650 110 CR
85,0	70,0	11,0	4,0	KDAE 0850 0700 110 CR
90,0	73,0	14,0	5,0	KDAE 0900 0730 140 CR
90,0	75,0	11,0	5,0	KDAE 0900 0750 110 CR

D_{H9}	d_{h9}	$E_{+0,2}$	C	ART.NR. / *ITEM*
95,0	80,0	11,0	5,0	KDAE 0950 0800 110 CR
100,0	83,0	14,0	5,0	KDAE 1000 0830 140 CR
100,0	85,0	12,5	5,0	KDAE 1000 0850 125 CR
105,0	88,0	14,0	5,0	KDAE 1050 0880 140 CR
105,0	90,0	12,5	5,0	KDAE 1050 0900 125 CR
110,0	93,0	14,0	5,0	KDAE 1100 0930 140 CR
110,0	95,0	12,5	5,0	KDAE 1100 0950 125 CR
115,0	98,0	14,0	5,0	KDAE 1150 0980 140 CR
115,0	100,0	12,5	5,0	KDAE 1150 1000 125 CR
120,0	103,0	14,0	5,0	KDAE 1200 1030 140 CR
120,0	105,0	12,5	5,0	KDAE 1200 1050 125 CR
125,0	108,0	14,0	5,0	KDAE 1250 1080 140 CR

OBS: Kontakta vår tekniska avdelning för dimensioner som inte finns i katalogen.
Remark: please contact our technical dept. for further dimensions not included in the catalogue.

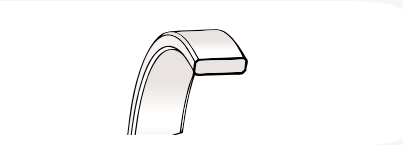

HIS

INRE STYRRING TYP HIS

Beskrivning

Styrringar typ HIS har utformats för att inrikta alla delar av cylindern (kolvstången med huvudet, kolven med cylinderdiametern).
De spelar en viktig roll eftersom de hjälper kolvstångstätningen, avstrykaren och kolvtätningen att arbeta utan felinriktning, samtidigt som de hindrar kontakt mellan metalldelar. Materialet, som har en mycket låg friktionsfaktor, orsakar inte lastförluster (linjära).
De tål deformation under tung last eftersom mjukningspunkten ligger nära fusionspunkten (arbetstemperatur 115 °C). För att lättare kunna välja längd på styrringar för kolvstång och kolv rekommenderar vi följande formel:

$h = \frac{Fx2}{DxQ}$ för kolv och $h = \frac{Fx2}{dxQ}$ för kolvstång

Där:

h	= styrringslängd i mm.
F	= radiella krafter
Q	= radiell kraft som materialet tål
D	= cylinderdiameter
d	= kolvens diameter

Tekniska data

Hastighet:	<0,8 m/s
Temperatur:	från -40 °C till +115 °C
Radiallast Q:	35 N/mm² vid 60 °C
Vätskor:	mineraloljor och vätskor (se tabell 1 på sida 12)

Material

Materialet är polyacetalharts förstärkt med glasfiber.
För arbetstemperaturer högre än 115 °C är materialet en armerad polyamidharts.
Materialreferens vid <115 °C: R0
Materialreferens vid >115 °C: R1

Montage

Montage är enkelt eftersom styrringen är snittad och mycket elastisk. Avfasningar på bägge sidor underlättar isättning av styrring i kolvstången.

HIS TYPE INTERNAL WEAR RING

Description

The HIS wear rings have been developed in order to keep all the parts of the cylinder aligned (the rod with the head, the piston with the bore).
They play an important role as they help the rod seal, the wiper and the piston seal working without any misalignments and at the same time they prevent any contact between the metal parts. The material, which has a very low friction factor, does not cause load losses (linearity).
It endures deformations under heavy loads, as the softening point is close to the fusion point (it works at 115 °C). For an easier choice of the piston or rod guide, we suggest the use of this formula to find the wear ring length.

$h = \frac{Fx2}{DxQ}$ *for the piston and* $h = \frac{Fx2}{dxQ}$ *for the rod*

Where:

h	*= wear ring length in mm.*
F	*= radial force applied*
Q	*= radial force endured by the material*
D	*= bore diameter*
d	*= rod diameter*

Technical data

Speed:	*<0,8 m/s*
Temperature:	*from - 40 °C to + 115 °C*
Radial load Q:	*35 N/mm2 at 60 °C*
Fluids:	*mineral oils and fluids (see table 1, page 12)*

Material

The material is a polyacetalic resin reinforced with fibreglass.
For working temperatures higher than 115 °C, the material is a reinforced polyamidic resin.
Compound reference for temp <115 °C: R0
Compound reference for temp > 115 °C: R1

Assembly

The assembly can be easily done since the wear ring is cut and extremely elastic.
The chamfers on both sides have been studied to better insert the wear ring in the rod.

HIS

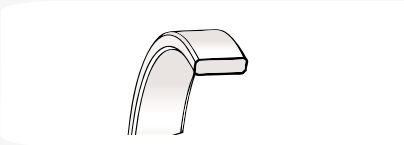

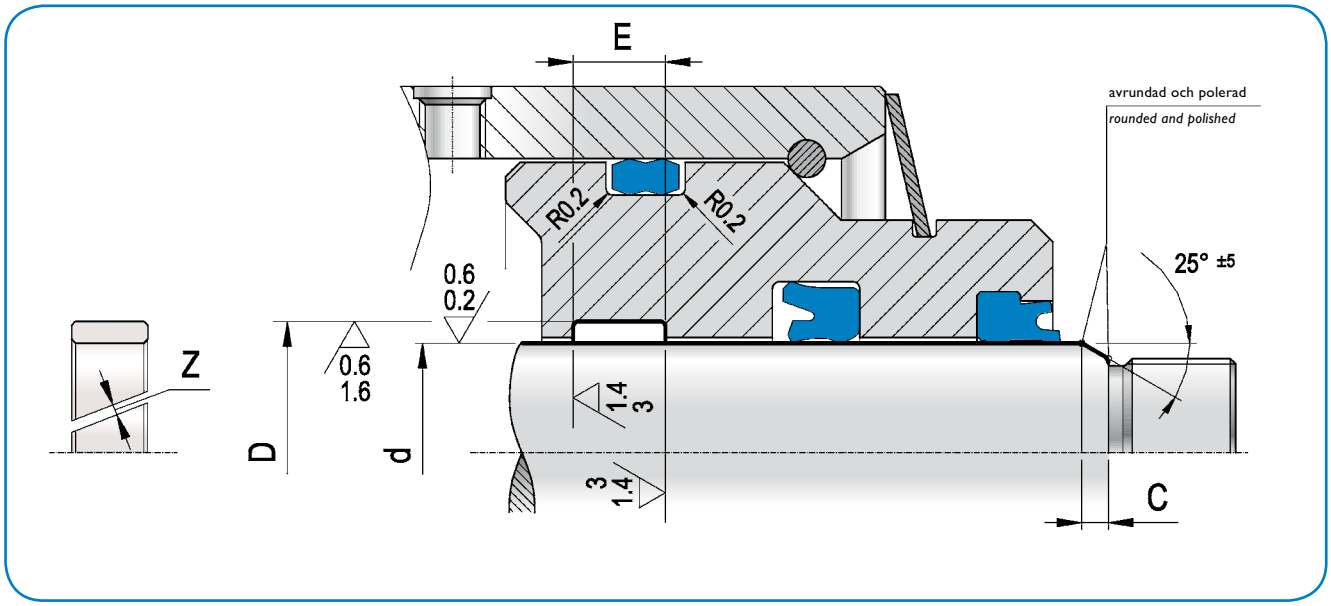

diametrar d-D *diameters*	0 - 50	51 - 100	101 - 150	151 - 300
z. mm ≥	2,0	2,5	3,0	3,5

d_{h9}	$D^{-0}_{+0,05}$	$E_{+0,2}$	C	ART.NR. / *ITEM*
12,0	16,0	9,6	> 3	HIS 0120 0160 096 R0
14,0	18,0	9,6	> 3	HIS 0140 0180 096 R0
16,0	20,0	9,6	> 3	HIS 0160 0200 096 R0
18,0	22,0	9,6	> 3	HIS 0180 0220 096 R0
20,0	24,0	9,6	> 3	HIS 0200 0240 096 R0
20,0	25,0	5,6	> 3	HIS 0200 0250 056 R0
20,0	25,0	9,7	> 3	HIS 0200 0250 097 R0
22,0	26,0	9,6	> 3	HIS 0220 0260 096 R0
22,0	27,0	5,6	> 3	HIS 0220 0270 056 R0
22,0	27,0	9,7	> 3	HIS 0220 0270 097 R0
25,0	29,0	9,6	> 3	HIS 0250 0290 096 R0
25,0	30,0	5,6	> 3	HIS 0250 0300 056 R0
25,0	30,0	9,7	> 3	HIS 0250 0300 097 R0
26,0	30,0	9,6	> 3	HIS 0260 0300 096 R0
27,0	32,0	5,6	> 3	HIS 0270 0320 056 R0
27,0	32,0	9,7	> 3	HIS 0270 0320 097 R0
28,0	32,0	9,6	> 3	HIS 0280 0320 096 R0
28,0	33,0	5,6	> 3	HIS 0280 0330 056 R0
28,0	33,0	9,7	> 3	HIS 0280 0330 097 R0
30,0	34,0	9,6	> 3	HIS 0300 0340 096 R0
30,0	35,0	5,6	> 3	HIS 0300 0350 056 R0
30,0	35,0	9,7	> 3	HIS 0300 0350 097 R0
32,0	36,0	9,6	> 3	HIS 0320 0360 096 R0
32,0	37,0	5,6	> 3	HIS 0320 0370 056 R0

d_{h9}	$D^{-0}_{+0,05}$	$E_{+0,2}$	C	ART.NR. / *ITEM*
32,0	37,0	9,7	> 3	HIS 0320 0370 097 R0
35,0	39,0	9,6	> 3	HIS 0350 0390 096 R0
35,0	40,0	5,6	> 3	HIS 0350 0400 056 R0
35,0	40,0	9,7	> 3	HIS 0350 0400 097 R0
36,0	40,0	9,6	> 3	HIS 0360 0400 096 R0
36,0	41,0	5,6	> 3	HIS 0360 0410 056 R0
36,0	41,0	9,7	> 3	HIS 0360 0410 097 R0
38,0	42,0	9,6	> 3	HIS 0380 0420 096 R0
40,0	44,0	9,6	> 3	HIS 0400 0440 096 R0
40,0	45,0	5,6	> 3	HIS 0400 0450 056 R0
40,0	45,0	9,7	> 3	HIS 0400 0450 097 R0
40,0	45,0	15,0	> 3	HIS 0400 0450 150 R0
42,0	46,0	9,6	> 3	HIS 0420 0460 096 R0
43,0	48,0	5,6	> 3	HIS 0430 0480 056 R0
45,0	50,0	5,6	> 3	HIS 0450 0500 056 R0
45,0	50,0	9,7	> 3	HIS 0450 0500 097 R0
45,0	50,0	15,0	> 3	HIS 0450 0500 150 R0
45,0	51,0	9,6	> 3	HIS 0450 0510 096 R0
46,0	52,0	9,6	> 3	HIS 0460 0520 096 R0
47,0	52,0	5,6	> 3	HIS 0470 0520 056 R0
47,0	52,0	9,7	> 3	HIS 0470 0520 097 R0
48,0	54,0	9,6	> 3	HIS 0480 0540 096 R0
50,0	55,0	5,6	> 3	HIS 0500 0550 056 R0
50,0	55,0	9,7	> 3	HIS 0500 0550 097 R0

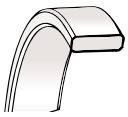

HIS

d_{h9}	D $^{-0}_{+0,05}$	E $_{+0,2}$	C	ART.NR. / *ITEM*
50,0	55,0	15,0	> 3	HIS 0500 0550 150 R0
50,0	56,0	9,6	> 3	HIS 0500 0560 096 R0
55,0	60,0	5,6	> 3	HIS 0550 0600 056 R0
55,0	60,0	9,7	> 3	HIS 0550 0600 097 R0
55,0	60,0	15,0	> 3	HIS 0550 0600 150 R0
55,0	61,0	9,6	> 3	HIS 0550 0610 096 R0
56,0	61,0	5,6	> 3	HIS 0560 0610 056 R0
56,0	61,0	9,7	> 3	HIS 0560 0610 097 R0
56,0	62,0	12,8	> 3	HIS 0560 0620 128 R0
58,0	63,0	5,6	> 3	HIS 0580 0630 056 R0
58,0	63,0	9,7	> 3	HIS 0580 0630 097 R0
60,0	65,0	5,6	> 3	HIS 0600 0650 056 R0
60,0	65,0	9,7	> 3	HIS 0600 0650 097 R0
60,0	65,0	15,0	> 3	HIS 0600 0650 150 R0
60,0	66,0	12,8	> 3	HIS 0600 0660 128 R0
63,0	68,0	5,6	> 3	HIS 0630 0680 056 R0
63,0	68,0	9,7	> 3	HIS 0630 0680 097 R0
63,0	69,0	12,8	> 3	HIS 0630 0690 128 R0
65,0	70,0	5,6	> 3	HIS 0650 0700 056 R0
65,0	70,0	9,7	> 3	HIS 0650 0700 097 R0
65,0	70,0	15,0	> 3	HIS 0650 0700 150 R0
65,0	71,0	12,8	> 3	HIS 0650 0710 128 R0
67,0	72,0	5,6	> 3	HIS 0670 0720 056 R0
70,0	75,0	5,6	> 3	HIS 0700 0750 056 R0
70,0	75,0	9,7	> 3	HIS 0700 0750 097 R0
70,0	75,0	15,0	> 3	HIS 0700 0750 150 R0
70,0	76,0	12,8	> 3	HIS 0700 0760 128 R0
72,0	78,0	12,8	> 3	HIS 0720 0780 128 R0
75,0	80,0	5,6	> 4	HIS 0750 0800 056 R0
75,0	80,0	9,7	> 4	HIS 0750 0800 097 R0
75,0	80,0	15,0	> 4	HIS 0750 0800 150 R0
75,0	81,0	12,8	> 4	HIS 0750 0810 128 R0
76,0	82,0	12,8	> 4	HIS 0760 0820 128 R0
80,0	85,0	5,6	> 4	HIS 0800 0850 056 R0
80,0	85,0	9,7	> 4	HIS 0800 0850 097 R0
80,0	85,0	15,0	> 4	HIS 0800 0850 150 R0
80,0	86,0	12,8	> 4	HIS 0800 0860 128 R0
85,0	90,0	5,6	> 4	HIS 0850 0900 056 R0
85,0	90,0	9,7	> 4	HIS 0850 0900 097 R0
85,0	90,0	15,0	> 4	HIS 0850 0900 150 R0
85,0	91,0	12,8	> 4	HIS 0850 0910 128 R0
90,0	95,0	5,6	> 4	HIS 0900 0950 056 R0
90,0	95,0	9,7	> 4	HIS 0900 0950 097 R0
90,0	95,0	15,0	> 4	HIS 0900 0950 150 R0
90,0	96,0	12,8	> 4	HIS 0900 0960 128 R0

d_{h9}	D $^{-0}_{+0,05}$	E $_{+0,2}$	C	ART.NR. / *ITEM*
92,0	97,0	5,6	> 4	HIS 0920 0970 056 R0
95,0	100,0	5,6	> 4	HIS 0950 1000 056 R0
95,0	100,0	9,7	> 4	HIS 0950 1000 097 R0
95,0	100,0	15,0	> 4	HIS 0950 1000 150 R0
95,0	100,0	20,0	> 4	HIS 0950 1000 200 R0
95,0	100,0	25,0	> 4	HIS 0950 1000 250 R0
95,0	101,0	12,8	> 4	HIS 0950 1010 128 R0
100,0	105,0	5,6	> 4	HIS 1000 1050 056 R0
100,0	105,0	9,7	> 4	HIS 1000 1050 097 R0
100,0	105,0	15,0	> 4	HIS 1000 1050 150 R0
100,0	105,0	20,0	> 4	HIS 1000 1050 200 R0
100,0	105,0	25,0	> 4	HIS 1000 1050 250 R0
100,0	106,0	12,8	> 4	HIS 1000 1060 128 R0
105,0	110,0	9,7	> 4	HIS 1050 1100 097 R0
105,0	110,0	15,0	> 4	HIS 1050 1100 150 R0
105,0	110,0	20,0	> 4	HIS 1050 1100 200 R0
105,0	110,0	25,0	> 4	HIS 1050 1100 250 R0
105,0	111,0	12,8	> 4	HIS 1050 1110 128 R0
110,0	115,0	9,7	> 4	HIS 1100 1150 097 R0
110,0	115,0	15,0	> 4	HIS 1100 1150 150 R0
110,0	115,0	20,0	> 4	HIS 1100 1150 200 R0
110,0	115,0	25,0	> 4	HIS 1100 1150 250 R0
110,0	116,0	12,8	> 4	HIS 1100 1160 128 R0
115,0	120,0	9,7	> 4	HIS 1150 1200 097 R0
115,0	120,0	15,0	> 4	HIS 1150 1200 150 R0
115,0	120,0	20,0	> 4	HIS 1150 1200 200 R0
115,0	120,0	25,0	> 4	HIS 1150 1200 250 R0
115,0	121,0	12,8	> 4	HIS 1150 1210 128 R0
120,0	125,0	9,7	> 4	HIS 1200 1250 097 R0
120,0	125,0	15,0	> 4	HIS 1200 1250 150 R0
120,0	125,0	20,0	> 4	HIS 1200 1250 200 R0
120,0	125,0	25,0	> 4	HIS 1200 1250 250 R0
120,0	126,0	12,8	> 4	HIS 1200 1260 128 R0
125,0	130,0	15,0	> 4	HIS 1250 1300 150 R0
125,0	130,0	20,0	> 4	HIS 1250 1300 200 R0
125,0	130,0	25,0	> 4	HIS 1250 1300 250 R0
125,0	131,0	12,8	> 4	HIS 1250 1310 128 R0
130,0	135,0	15,0	> 4	HIS 1300 1350 150 R0
130,0	135,0	20,0	> 4	HIS 1300 1350 200 R0
130,0	135,0	25,0	> 4	HIS 1300 1350 250 R0
130,0	136,0	12,8	> 4	HIS 1300 1360 128 R0
135,0	140,0	15,0	> 4	HIS 1350 1400 150 R0
135,0	140,0	20,0	> 4	HIS 1350 1400 200 R0
135,0	140,0	25,0	> 4	HIS 1350 1400 250 R0
135,0	141,0	12,8	> 4	HIS 1350 1410 128 R0

HIS

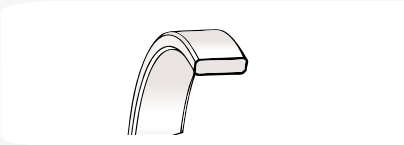

d_{h9}	D $^{-0}_{+0,05}$	E $_{+0,2}$	C	ART.NR. / *ITEM*
140,0	145,0	15,0	> 4	HIS 1400 1450 150 R0
140,0	145,0	20,0	> 4	HIS 1400 1450 200 R0
140,0	145,0	25,0	> 4	HIS 1400 1450 250 R0
140,0	146,0	12,8	> 4	HIS 1400 1460 128 R0
145,0	150,0	15,0	> 4	HIS 1450 1500 150 R0
145,0	150,0	20,0	> 4	HIS 1450 1500 200 R0
145,0	150,0	25,0	> 4	HIS 1450 1500 250 R0
145,0	151,0	12,8	> 4	HIS 1450 1510 128 R0
150,0	156,0	12,8	> 4	HIS 1500 1560 128 R0
155,0	161,0	19,2	> 4	HIS 1550 1610 192 R0
160,0	166,0	19,2	> 5	HIS 1600 1660 192 R0
165,0	171,0	19,2	> 5	HIS 1650 1710 192 R0
170,0	176,0	19,2	> 5	HIS 1700 1760 192 R0
175,0	181,0	19,2	> 5	HIS 1750 1810 192 R0
180,0	186,0	19,2	> 5	HIS 1800 1860 192 R0

d_{h9}	D $^{-0}_{+0,05}$	E $_{+0,2}$	C	ART.NR. / *ITEM*
185,0	191,0	19,2	> 5	HIS 1850 1910 192 R0
190,0	196,0	19,2	> 5	HIS 1900 1960 192 R0
195,0	201,0	19,2	> 5	HIS 1950 2100 192 R0
200,0	206,0	19,2	> 5	HIS 2000 2060 192 R0
205,0	211,0	19,2	> 5	HIS 2050 2110 192 R0
210,0	216,0	19,2	> 5	HIS 2100 2160 192 R0
215,0	221,0	19,2	> 5	HIS 2150 2210 192 R0
220,0	226,0	19,2	> 5	HIS 2200 2260 192 R0
225,0	231,0	19,2	> 5	HIS 2250 2310 192 R0
230,0	236,0	19,2	> 5	HIS 2300 2360 192 R0
235,0	241,0	19,2	> 5	HIS 2350 2410 192 R0
240,0	246,0	19,2	> 5	HIS 2400 2460 192 R0
245,0	251,0	19,2	> 5	HIS 2450 2510 192 R0

HES

YTTRE STYRRING TYP HES

Beskrivning

Styrringar typ HES har utformats för att inrikta alla delar av cylindern (kolvstången med huvudet, kolven med cylinderdiametern).
De spelar en viktig roll eftersom de hjälper kolvstångstätningen, avstrykaren och kolvtätningen att arbeta utan felinriktning, samtidigt som de hindrar kontakt mellan metalldelar. Materialet, som har en mycket låg friktionsfaktor, orsakar inte lastförluster (linjära).
De tål deformation under tung last eftersom mjukningspunkten ligger nära fusionspunkten (arbetstemperatur 115 °C).
För att lättare kunna välja längd på styrringar för kolvstång och kolv rekommenderar vi följande formel:

$h=\frac{Fx2}{DxQ}$ för kolv och $h=\frac{Fx2}{dxQ}$ för kolvstång

Där:

h	= styrringslängd i mm.
F	= radiella krafter
Q	= radiell kraft som materialet tål
D	= cylinderdiameter
d	= kolvens diameter

Tekniska data

Hastighet:	<0,8 m/s
Temperatur:	från -40 °C till +115 °C
Radiallast Q:	35 N/mm² vid 60 °C
Vätskor:	mineraloljor och vätskor (se tabell 1 på sida 12)

Material

Materialet är polyacetalharts förstärkt med glasfiber.
För arbetstemperaturer högre än 115 °C är materialet en armerad polyamidharts.
Materialreferens vid <115 °C: R0
Materialreferens vid >115 °C: R1

Montage

Montage är enkelt eftersom styrringen är snittad och mycket elastisk. Avfasningar på bägge sidor underlättar isättning av styrring i kolvstången.

HES TYPE EXTERNAL WEAR RING

Description

The HES wear rings have been developed in order to keep all the parts of the cylinder aligned (the rod with the head, the piston with the bore). They play an important role
as they help the rod seal, the wiper and the piston seal working without any misalignments and at the same time they prevent any contact between the metal parts. The material, which has a very low friction factor, does not cause load losses (linearity).
It endures deformations under heavy loads, as the softening point is close to the fusion point (it works at 115 °C).
For an easier choice of the piston or rod guide, we suggest the use of this formula to find the wear ring length.

$h=\frac{Fx2}{DxQ}$ *for the piston and* $h=\frac{Fx2}{dxQ}$ *for the rod*

Where:

h	*= wear ring length in mm.*
F	*= radial force applied*
Q	*= radial force endured by the material*
D	*= bore diameter*
d	*= rod diameter*

Technical data

Speed:	*<0,8 m/s*
Temperature:	*from - 40 °C to + 115 °C*
Radial load Q:	*35 N/mm2 at a temperature of 60 °C*
Fluids:	*mineral oils and fluids (see table 1, page 12)*

Material

The material is a polyacetalic resin reinforced with fibreglass.
For working temperatures higher than 115 °C, the material is a reinforced polyamidic resin.
Compound reference for temp <115 °C: R0
Compound reference for temp > 115 °C: R1

Assembly

The assembly can be easily done since the wear ring is cut and extremely elastic.
The chamfers on both sides have been studied to better insert the wear ring in the rod.

HES

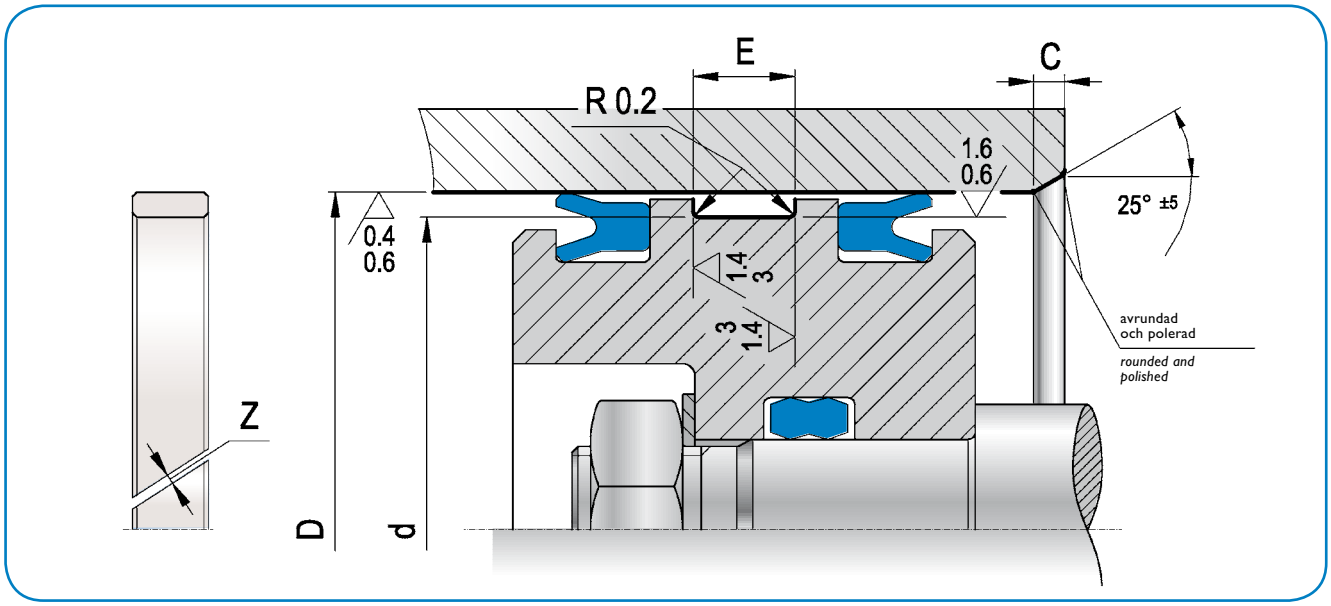

diametrar d-D *diameters*	0 - 50	51 - 100	101 - 150	151 - 300
z. mm ≥	2,0	2,5	3,0	3,5

D H9	d + 0 -0,05	E +0,2	C	ART.NR. / *ITEM*
16,0	12,0	9,6	> 3	HES 0160 0120 096 R0
18,0	14,0	9,6	> 3	HES 0180 0140 096 R0
20,0	16,0	9,6	> 3	HES 0200 0160 096 R0
22,0	18,0	9,6	> 3	HES 0220 0180 096 R0
24,0	20,0	9,6	> 3	HES 0240 0200 096 R0
25,0	20,0	5,6	> 3	HES 0250 0200 056 R0
25,0	20,0	9,7	> 3	HES 0250 0200 097 R0
25,0	21,0	9,6	> 3	HES 0250 0210 096 R0
27,0	22,0	5,6	> 3	HES 0270 0220 056 R0
27,0	22,0	9,7	> 3	HES 0270 0220 097 R0
28,0	24,0	9,6	> 3	HES 0280 0240 096 R0
30,0	25,0	5,6	> 3	HES 0300 0250 056 R0
30,0	25,0	9,7	> 3	HES 0300 0250 097 R0
30,0	26,0	9,6	> 3	HES 0300 0260 096 R0
32,0	27,0	5,6	> 3	HES 0320 0270 056 R0
32,0	27,0	9,7	> 3	HES 0320 0270 097 R0
32,0	28,0	9,6	> 3	HES 0320 0280 096 R0
33,0	28,0	5,6	> 3	HES 0330 0280 056 R0
33,0	28,0	9,7	> 3	HES 0330 0280 097 R0
34,0	30,0	9,6	> 3	HES 0340 0300 096 R0
35,0	30,0	5,6	> 3	HES 0350 0300 056 R0
35,0	30,0	9,7	> 3	HES 0350 0300 097 R0
35,0	31,0	9,6	> 3	HES 0350 0310 096 R0
36,0	32,0	9,6	> 3	HES 0360 0320 096 R0

D H9	d + 0 -0,05	E +0,2	C	ART.NR. / *ITEM*
37,0	32,0	5,6	> 3	HES 0370 0320 056 R0
37,0	32,0	9,7	> 3	HES 0370 0320 097 R0
40,0	35,0	5,6	> 3	HES 0400 0350 056 R0
40,0	35,0	9,7	> 3	HES 0400 0350 097 R0
40,0	36,0	9,6	> 3	HES 0400 0360 096 R0
41,0	36,0	5,6	> 3	HES 0410 0360 056 R0
41,0	36,0	9,7	> 3	HES 0410 0360 097 R0
45,0	40,0	5,6	> 3	HES 0450 0400 056 R0
45,0	40,0	9,7	> 3	HES 0450 0400 097 R0
45,0	40,0	15,0	> 3	HES 0450 0400 150 R0
45,0	41,0	9,6	> 3	HES 0450 0410 096 R0
48,0	43,0	5,6	> 3	HES 0480 0430 056 R0
50,0	44,0	9,6	> 3	HES 0500 0440 096 R0
50,0	45,0	5,6	> 3	HES 0500 0450 056 R0
50,0	45,0	9,7	> 3	HES 0500 0450 097 R0
50,0	45,0	15,0	> 3	HES 0500 0450 150 R0
52,0	47,0	5,6	> 3	HES 0520 0470 056 R0
52,0	47,0	9,7	> 3	HES 0520 0470 097 R0
55,0	49,0	12,8	> 3	HES 0550 0490 128 R0
55,0	50,0	5,6	> 3	HES 0550 0500 056 R0
55,0	50,0	9,7	> 3	HES 0550 0500 097 R0
55,0	50,0	15,0	> 3	HES 0550 0500 150 R0
60,0	54,0	12,8	> 3	HES 0600 0540 128 R0
60,0	55,0	5,6	> 3	HES 0600 0550 056 R0

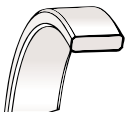

HES

D H9	d + 0 -0,05	E +0,2	C	ART.NR. / *ITEM*
60,0	55,0	9,7	> 3	HES 0600 0550 097 R0
60,0	55,0	15,0	> 3	HES 0600 0550 150 R0
61,0	56,0	5,6	> 3	HES 0610 0560 056 R0
61,0	56,0	9,7	> 3	HES 0610 0560 097 R0
63,0	57,0	12,8	> 3	HES 0630 0570 128 R0
63,0	58,0	5,6	> 3	HES 0630 0580 056 R0
63,0	58,0	9,7	> 3	HES 0630 0580 097 R0
65,0	59,0	12,8	> 3	HES 0650 0590 128 R0
65,0	60,0	5,6	> 3	HES 0650 0600 056 R0
65,0	60,0	9,7	> 3	HES 0650 0600 097 R0
65,0	60,0	15,0	> 3	HES 0650 0600 150 R0
68,0	63,0	5,6	> 3	HES 0680 0630 056 R0
68,0	63,0	9,7	> 3	HES 0680 0630 097 R0
70,0	64,0	12,8	> 3	HES 0700 0640 128 R0
70,0	65,0	5,6	> 3	HES 0700 0650 056 R0
70,0	65,0	9,7	> 3	HES 0700 0650 097 R0
70,0	65,0	15,0	> 3	HES 0700 0650 150 R0
72,0	67,0	5,6	> 3	HES 0720 0670 056 R0
75,0	69,0	12,8	> 3	HES 0750 0690 128 R0
75,0	70,0	5,6	> 3	HES 0750 0700 056 R0
75,0	70,0	9,7	> 3	HES 0750 0700 097 R0
75,0	70,0	15,0	> 3	HES 0750 0700 150 R0
80,0	74,0	12,8	> 4	HES 0800 0740 128 R0
80,0	75,0	5,6	> 4	HES 0800 0750 056 R0
80,0	75,0	9,7	> 4	HES 0800 0750 097 R0
80,0	75,0	15,0	> 4	HES 0800 0750 150 R0
85,0	79,0	12,8	> 4	HES 0850 0790 128 R0
85,0	80,0	5,6	> 4	HES 0850 0800 056 R0
85,0	80,0	9,7	> 4	HES 0850 0800 097 R0
85,0	80,0	15,0	> 4	HES 0850 0800 150 R0
90,0	84,0	12,8	> 4	HES 0900 0840 128 R0
90,0	85,0	5,6	> 4	HES 0900 0850 056 R0
90,0	85,0	9,7	> 4	HES 0900 0850 097 R0
90,0	85,0	15,0	> 4	HES 0900 0850 150 R0
95,0	89,0	12,8	> 4	HES 0950 0890 128 R0
95,0	90,0	5,6	> 4	HES 0950 0900 056 R0
95,0	90,0	9,7	> 4	HES 0950 0900 097 R0
95,0	90,0	15,0	> 4	HES 0950 0900 150 R0
97,0	92,0	5,6	> 4	HES 0970 0920 056 R0
100,0	94,0	12,8	> 4	HES 1000 0940 128 R0
100,0	95,0	5,6	> 4	HES 1000 0950 056 R0
100,0	95,0	9,7	> 4	HES 1000 0950 097 R0
100,0	95,0	15,0	> 4	HES 1000 0950 150 R0
100,0	95,0	20,0	> 4	HES 1000 0950 200 R0
100,0	95,0	25,0	> 4	HES 1000 0950 250 R0

D H9	d + 0 -0,05	E +0,2	C	ART.NR. / *ITEM*
105,0	99,0	12,8	> 4	HES 1050 0990 128 R0
105,0	100,0	5,6	> 4	HES 1050 1000 056 R0
105,0	100,0	9,7	> 4	HES 1050 1000 097 R0
105,0	100,0	15,0	> 4	HES 1050 1000 150 R0
105,0	100,0	20,0	> 4	HES 1050 1000 200 R0
105,0	100,0	25,0	> 4	HES 1050 1000 250 R0
110,0	104,0	12,8	> 4	HES 1100 1040 128 R0
110,0	105,0	9,7	> 4	HES 1100 1050 097 R0
110,0	105,0	15,0	> 4	HES 1100 1050 150 R0
110,0	105,0	20,0	> 4	HES 1100 1050 200 R0
110,0	105,0	25,0	> 4	HES 1100 1050 250 R0
115,0	109,0	12,8	> 4	HES 1150 1090 128 R0
115,0	110,0	9,7	> 4	HES 1150 1100 097 R0
115,0	110,0	15,0	> 4	HES 1150 1100 150 R0
115,0	110,0	20,0	> 4	HES 1150 1100 200 R0
115,0	110,0	25,0	> 4	HES 1150 1100 250 R0
120,0	114,0	12,8	> 4	HES 1200 1140 128 R0
120,0	115,0	9,7	> 4	HES 1200 1150 097 R0
120,0	115,0	15,0	> 4	HES 1200 1150 150 R0
120,0	115,0	20,0	> 4	HES 1200 1150 200 R0
120,0	115,0	25,0	> 4	HES 1200 1150 250 R0
125,0	119,0	12,8	> 4	HES 1250 1190 128 R0
125,0	120,0	9,7	> 4	HES 1250 1200 097 R0
125,0	120,0	15,0	> 4	HES 1250 1200 150 R0
125,0	120,0	20,0	> 4	HES 1250 1200 200 R0
125,0	120,0	25,0	> 4	HES 1250 1200 250 R0
130,0	124,0	12,8	> 4	HES 1300 1240 128 R0
130,0	125,0	15,0	> 4	HES 1300 1250 150 R0
130,0	125,0	20,0	> 4	HES 1300 1250 200 R0
130,0	125,0	25,0	> 4	HES 1300 1250 250 R0
135,0	129,0	12,8	> 4	HES 1350 1290 128 R0
135,0	130,0	15,0	> 4	HES 1350 1300 150 R0
135,0	130,0	20,0	> 4	HES 1350 1300 200 R0
135,0	130,0	25,0	> 4	HES 1350 1300 250 R0
140,0	134,0	12,8	> 4	HES 1400 1340 128 R0
140,0	135,0	15,0	> 4	HES 1400 1350 150 R0
140,0	135,0	20,0	> 4	HES 1400 1350 200 R0
140,0	135,0	25,0	> 4	HES 1400 1350 250 R0
145,0	139,0	12,8	> 4	HES 1450 1390 128 R0
145,0	140,0	15,0	> 4	HES 1450 1400 150 R0
145,0	140,0	20,0	> 4	HES 1450 1400 200 R0
145,0	140,0	25,0	> 4	HES 1450 1400 250 R0
150,0	144,0	12,8	> 4	HES 1500 1440 128 R0
150,0	145,0	15,0	> 4	HES 1500 1450 150 R0
150,0	145,0	20,0	> 4	HES 1500 1450 200 R0

HES

D H9	d + 0 -0,05	E +0,2	C	ART.NR. / *ITEM*
150,0	145,0	25,0	> 4	HES 1500 1450 250 R0
155,0	149,0	19,2	> 4	HES 1550 1490 192 R0
160,0	154,0	19,2	> 5	HES 1600 1540 192 R0
165,0	159,0	19,2	> 5	HES 1650 1590 192 R0
170,0	164,0	19,2	> 5	HES 1700 1640 192 R0
175,0	169,0	19,2	> 5	HES 1750 1690 192 R0
180,0	174,0	19,2	> 5	HES 1800 1740 192 R0
185,0	179,0	19,2	> 5	HES 1850 1790 192 R0
190,0	184,0	19,2	> 5	HES 1900 1840 192 R0

D H9	d + 0 -0,05	E +0,2	C	ART.NR. / *ITEM*
195,0	189,0	19,2	> 5	HES 1950 1890 192 R0
200,0	194,0	19,2	> 5	HES 2000 1940 192 R0
210,0	204,0	19,2	> 5	HES 2100 2040 192 R0
220,0	214,0	19,2	> 5	HES 2200 2140 192 R0
230,0	224,0	19,2	> 5	HES 2300 2240 192 R0
240,0	234,0	19,2	> 5	HES 2400 2340 192 R0
250,0	244,0	19,2	> 5	HES 2500 2440 192 R0

OBS: Kontakta vår tekniska avdelning för dimensioner som inte finns i katalogen.
Remark: please contact our technical dept. for further dimensions not included in the catalogue.

STYRBAND AV PTFE / VÄVARMERAD FENOLHARTS

PTFE or phenolic fabrics guide rings

Material

Val av material beror på de specifika behov som uppstår beroende på cylinderns radiella last.

- PTFE med brons (TM eller TV), slitstarkt, låg friktion, för låga och medeltunga laster.
- Vävarmerad fenolharts (FR), för tunga radiella laster.

Tekniska data PTFE

Hastighet:	15 m/s
Temperatur:	från -50 °C till +160 °C, med toppar upp till 200 °C.
Radiell last:	15 N/mm vid 30 °C 12 N/mm vid 80 °C 8 N/mm vid 120 °C
Vätskor:	Mineraloljor (se tabell 1 på sida 12)

Montage

Montage är enkelt eftersom styrringen är snittad.

Tekniska data Fenolharts

Hastighet:	1 m/s
Temperatur:	från -50 °C till +150 °C
Radiell last:	120 N/mm vid 25 °C 60 N/mm vid 80 °C
Vätskor:	Mineraloljor

Montage

Montage är enkelt i slutna spår eftersom styrringen är snittad och elastisk. Avfasningar på bägge sidor underlättar isättning av styrring i cylindern.

Material

The choice of the material depends on the specific needs arising from the cylinder radial load.

- *PTFE with bronze (TM or TV), wear resistant, low friction, for low ando medium load .*
- *Fabrics-reinforced phenolic (FR) resin, for high radial loads.*

PTFE Technical Data

Speed:	*15 m/s*
Temperature:	*from - 50 °C a + 160 °C, with pick at 200 °C.*
Radial Load:	*15 N/mm at 30 °C* *12 N/mm at 80 °C* *8 N/mm at 120 °C*
Fluids:	*Mineral Oil* *(see table 1, page 12)*

Assembly

The assembly can be easily done since the wear ring is cut.

Phenolic Resin Technical Data

Speed:	*1 m/s*
Temperature:	*from - 50 °C to + 150 °C*
Radial Load:	*120 N/mm at 25 °C* *60 N/mm at 80 °C*
Fluids:	*Mineral Oil*

Assembly

The assembly can be easily done in closed groove since the wear ring is cut and elastic.
The chamfers on both sides have been studied to better insert the wear ring in the cylinder.

Dimensionering

Följande formel kan användas för att beräkna styrringens höjd enligt figur 1.

$$\text{Styrringens höjd} \quad T = \frac{C \times f}{D \times Cr}$$

Där:

C: radiell last i N [Newton]
f: säkerhetsfaktor [2]
D: stång- och cylinderdiameter
Cr: tillåten radiell last i N/mm beroende på material (PTFE eller Fenolharts)

Dimensioning

The following formula can be used to calculate the wear ring's height as shown in Pic.1

$$\textit{Wear ring's height} \quad T = \frac{C * f}{D * Cr}$$

As:

C: radial load in N [Newton]
f: safety factor [2]
D: rod and bore diameter
Cr: allowable radial load reported materia (PTFE or Phenolic Resin)

Exempel för PTFE

Temperatur:	80 °C
Radiell last:	8000 N
Stång- och cylinderdiameter:	80 mm

$$\text{Styrringens höjd} \quad T = \frac{8000 \times 2}{80 \times 12} = 16{,}66 \text{ mm}$$

Example for PTFE

Temperature:	*80 °C*
Radial load:	*8000 N*
Rod or Bore diameter:	*80 mm*

$$\textit{Wear ring's height} \quad T = \frac{8000 * 2}{80 * 12} = 16.66 \text{ mm}$$

Exempel för Fenolharts

Temperatur:	80 °C
Radiell last:	16000 N
Stång- och cylinderdiameter:	80 mm

$$\text{Styrringens höjd} \quad T = \frac{16000 \times 2}{80 \times 60} = 6{,}66 \text{ mm}$$

Example of Phenolic Resin

Temperature:	*80 °C*
Radial loan:	*16000 N*
Rod or Bore Diameter:	*80 mm*

$$\textit{Wear ring's height} \quad T = \frac{16000 * 2}{80 * 60} = 6{,}66 \text{ mm}$$

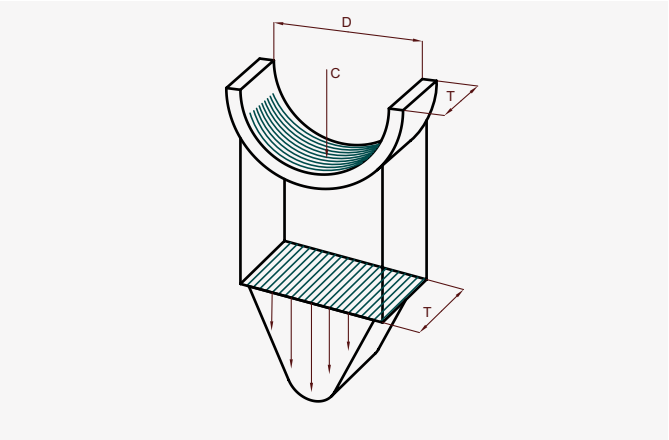

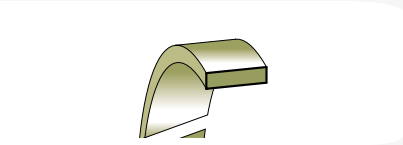

NG

STYRTEJP I PTFE TYP NG

Beskrivning

NG bronsfylld tejp av polytetrafluoroetylen levereras i rullar. Genom att klippa den i valfria längder är det möjligt att byta ut styrningar av termoplastiska material. Den kan användas för kolvstänger och kolvar.
Tack vare dess egenskaper (noggrannhet av tjocklek, låg friktion och kemisk resistens) är den kompatibel med många typer av vätskor.
Den kan användas med eller utan avfasningar.

Tekniska data

Hastighet:	<15 m/s
Temperatur:	från -50 °C till +160 °C med toppar upp till 200 °C
Vätskor:	många olika typer pga. hög kemisk resistens (se tabell 1 på sida 12)

Material

Materialet är bronsfylld polytetrafluoroetylen (PTFE).
Materialreferens:
TV LBR4030 (grön),
TM LBR4003 (mörkbrun)

NG TYPE PTFE WEAR TAPE

Description

NG bronze filled Polytetrafluoroethylene tape is supplied in rolls.
By cutting them is possible to obtain interchangeable guides to replace thermoplastic material.
They can be used for rods or pistons.
Thanks to the properties (thickness accuracy, low friction and chemical resistance) are compatible with many fluids.
They can be with or without chamfers.

Technical Data

Speed:	*<15 m/s*
Temperature:	*from -50 °C to +160 °C peaks till 200 °C.*
Fluids:	*many fluids as a material with high chemical inertia (see table 1, page 12)*

Material

The material is bronze filled polytetrafluoroethylene (PTFE).
Compound reference:
TV LBR4030 (green),
TM LBR4003 (dark brown)

NG

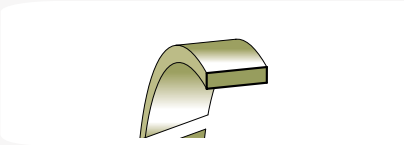

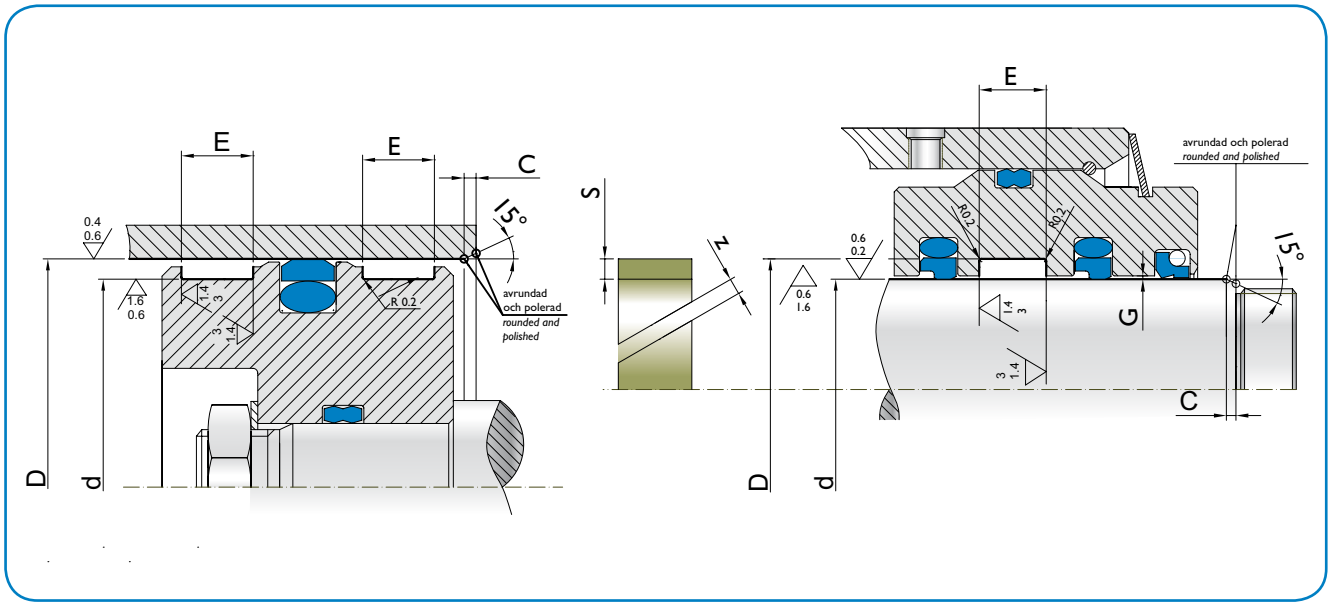

Spårdimension - *Groove dimension*				
d_{h9}	D_{H9}	E $_{+0.2}$	Ringens tjocklek *Ring thickness* *s*	z
8-20	d + 2s	3,20	1,50	1,0-2,0
15-35	d + 2s	4,20	1,50 2,00	1,0-2,0
15-75	d + 2s	5,60	1,50 2,00 2,50	1,5-3,5
20-75	d + 2s	6,30	1,50 2,00 2,50	1,5-3,5
30-250	d + 2s	8,10	1,50 2,00 2,50	2,0-5,0
35-300	d + 2s	9,70	1,50 2,00 2,50 3,00	2,0-6,0
120-400	d + 2s	15,00	1,50 2,00 2,50 3,00	4,0-8,0
200-900	d + 2s	20,00	1,50 2,00 2,50 3,00	4,5-8,0
300-900	d + 2s	25,00	2,00 2,50 3,00	6,0-8,0
300-900	d + 2s	30,00	2,00 2,50 3,00	6,0-10,0

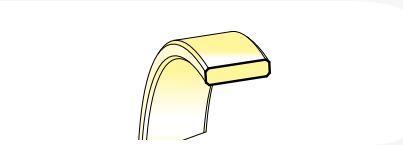

HPWI

STYRRING TYP HPWI

Beskrivning

Styrringar typ HPWI av fenolharts kan ersätta andra styrringar av termoplast.
De kan användas till kolvstänger och kolvar.
De tillverkas av rör med hög noggrannhet på tjocklek, tål stora laster och används till mycket tunga applikationer.

Tekniska data

Hastighet:	1 m/s
Temperatur:	från -40 °C till +130 °C
Vätskor:	mineralisk hydraulolja (se tabell 1 på sida 12)

Material

Materialet är flätor av naturbomull impregnerat med fenolharts.
Kan fyllas med grafit, PTFE och molybdendisulfit (MoS_2).

HPWI TYPE WEAR RING

Description

HPWI phenolic resin guides can be interchangeable with other thermoplastic wear rings.
They can be used for rods or pistons.
They are produced from tubes with high thickness accuracy, supporting very high loads and are used in very heavy conditions.

Technical Data

Speed:	*<1 m/s*
Temperature:	*from - 40 °C a + 130 °C*
Fluids:	*hydraulic mineral oil (see table 1, page 12)*

Material

The material is a impregnated phenolic resin in natural cotton braids.
Can be filled with graphite, PTFE and molybdenum disulfide (MoS2).

HPWI

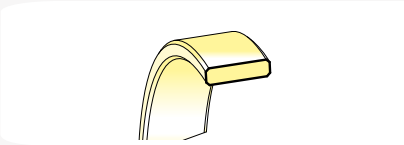

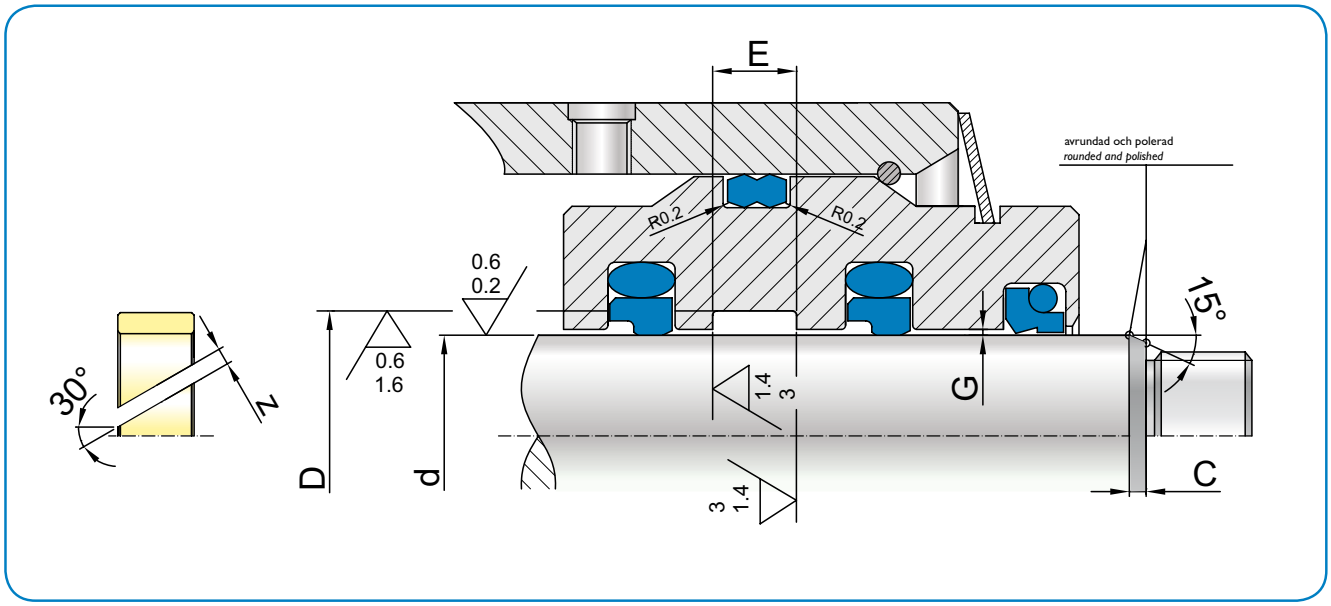

d_{f8}	D_{H9}	E +0.2	E +0.2	E +0.2	ART.NR. / ITEM			
40,0	45,0	5,6	9,7	\	HPWI 0400	0450	056-097	S0
45,0	50,0	5,6	9,7	\	HPWI 0450	0500	056-097	S0
50,0	55,0	5,6	9,7	\	HPWI 0500	0550	056-097	S0
55,0	60,0	5,6	9,7	\	HPWI 0550	0600	056-097	S0
56,0	61,0	5,6	9,7	\	HPWI 0560	0610	056-097	S0
60,0	65,0	5,6	9,7	\	HPWI 0600	0650	056-097	S0
65,0	70,0	5,6	9,7	\	HPWI 0650	0700	056-097	S0
70,0	75,0	5,6	9,7	\	HPWI 0700	0750	056-097	S0
75,0	80,0	5,6	9,7	\	HPWI 0750	0800	056-097	S0
80,0	85,0	9,7	12,8	15,0	HPWI 0800	0850	097-128-150	S0
85,0	90,0	9,7	12,8	15,0	HPWI 0850	0900	097-128-150	S0
90,0	95,0	9,7	12,8	15,0	HPWI 0900	0950	097-128-150	S0
95,0	100,0	9,7	12,8	15,0	HPWI 0950	1000	097-128-150	S0
100,0	105,0	9,7	12,8	15,0	HPWI 1000	1050	097-128-150	S0
105,0	110,0	9,7	12,8	15,0	HPWI 1050	1100	097-128-150	S0
110,0	115,0	9,7	12,8	15,0	HPWI 1100	1150	097-128-150	S0
115,0	120,0	9,7	12,8	15,0	HPWI 1150	1200	097-128-150	S0
120,0	125,0	9,7	12,8	15,0	HPWI 1200	1250	097-128-150	S0
125,0	130,0	9,7	12,8	15,0	HPWI 1250	1300	097-128-150	S0
130,0	135,0	9,7	12,8	15,0	HPWI 1300	1350	097-128-150	S0
135,0	140,0	9,7	12,8	15,0	HPWI 1350	1400	097-128-150	S0
140,0	145,0	9,7	12,8	15,0	HPWI 1400	1450	097-128-150	S0
145,0	150,0	9,7	12,8	15,0	HPWI 1450	1500	097-128-150	S0
150,0	155,0	9,7	12,8	15,0	HPWI 1500	1550	097-128-150	S0

d_{f8}	D_{H9}	E +0.2	E +0.2	E +0.2	ART.NR. / ITEM			
155,0	160,0	9,7	12,8	15,0	HPWI 1550	1600	097-128-150	S0
160,0	165,0	9,7	12,8	15,0	HPWI 1600	1650	097-128-150	S0
165,0	170,0	9,7	12,8	15,0	HPWI 1650	1700	097-128-150	S0
170,0	175,0	9,7	12,8	15,0	HPWI 1700	1750	097-128-150	S0
175,0	180,0	9,7	12,8	15,0	HPWI 1750	1800	097-128-150	S0
180,0	185,0	9,7	12,8	15,0	HPWI 1800	1850	097-128-150	S0
185,0	190,0	9,7	12,8	15,0	HPWI 1850	1900	097-128-150	S0
190,0	195,0	9,7	12,8	15,0	HPWI 1900	1950	097-128-150	S0
195,0	200,0	9,7	12,8	15,0	HPWI 1950	2000	097-128-150	S0
200,0	205,0	9,7	12,8	15,0	HPWI 2000	2050	097-128-150	S0
205,0	210,0	9,7	12,8	15,0	HPWI 2050	2100	097-128-150	S0
210,0	215,0	9,7	12,8	15,0	HPWI 2100	2150	097-128-150	S0
215,0	220,0	\	15,0	25,0	HPWI 2150	2200	150-250	S0
220,0	225,0	\	15,0	25,0	HPWI 2200	2250	150-250	S0
225,0	230,0	\	15,0	25,0	HPWI 2250	2300	150-250	S0
230,0	235,0	\	15,0	25,0	HPWI 2300	2350	150-250	S0
235,0	240,0	\	15,0	25,0	HPWI 2350	2400	150-250	
240,0	245,0	\	15,0	25,0	HPWI 2400	2450	150-250	S0
245,0	250,0	\	15,0	25,0	HPWI 2450	2500	150-250	S0
250,0	255,0	\	15,0	25,0	HPWI 2500	2550	150-250	S0

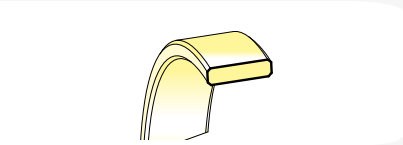

HPWE

STYRRING TYP HPWE

Beskrivning

Styrringar typ HPWE av fenolharts kan ersätta andra styrringar av termoplast.
De kan användas till kolvstänger och kolvar.
De tillverkas av rör med hög noggrannhet på tjocklek, tål stora laster och används till mycket tunga applikationer.

Tekniska data

Hastighet:	<1 m/s
Temperatur:	från -40 °C till +130 °C
Vätskor:	mineralisk hydraulolja (se tabell 1 på sida 12)

Material

Materialet är flätor av naturbomull impregnerat med fenolharts.
Kan fyllas med grafit, PTFE och molybdendisulfit (MoS_2).

HPWE TYPE WEAR RING

Description

HPWE phenolic resin guides can be interchangeable with other thermoplastic wear rings.
They can be used for rods or pistons
They are produced from tubes with high thickness accuracy, supporting very high loads and are used in very heavy conditions.

Technical Data

Speed:	*<1 m/s*
Temperature:	*from - 40 °C a + 130 °C*
Fluids:	*hydraulic mineral oil (see table 1, page 12)*

Material

The material is a impregnated phenolic resin in natural cotton braids.
Can be filled with graphite, PTFE and molybdenum disulfide (MoS2).

HPWE

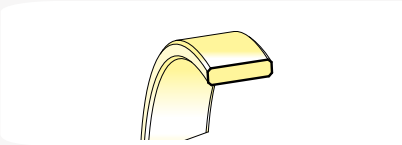

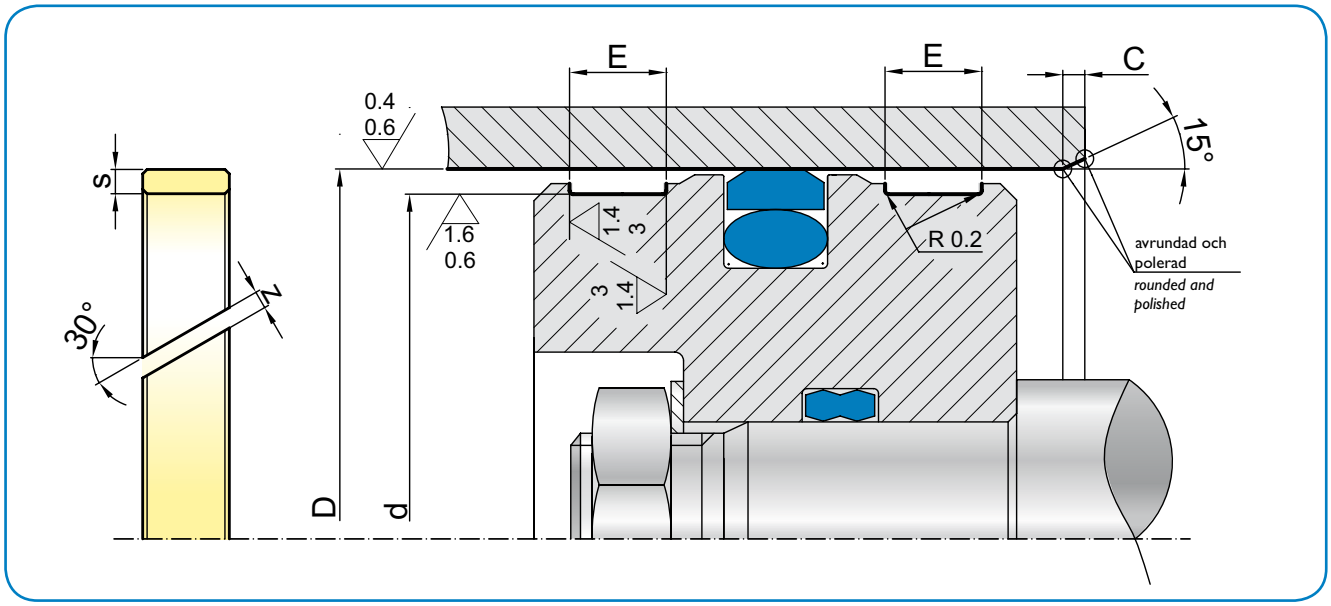

d_{f8}	D_{H9}	E +0.2	E +0.2	E +0.2	ART.NR. / ITEM
45,0	40,0	5,6	9,7	\	HPWE 0450 0400 056-097 S0
50,0	45,0	5,6	9,7	\	HPWE 0500 0450 056-097 S0
55,0	50,0	5,6	9,7	\	HPWE 0550 0500 056-097 S0
60,0	55,0	5,6	9,7	\	HPWE 0600 0550 056-097 S0
61,0	56,0	5,6	9,7	\	HPWE 0610 0560 056-097 S0
65,0	60,0	5,6	9,7	\	HPWE 0650 0600 056-097 S0
70,0	65,0	5,6	9,7	\	HPWE 0700 0650 056-097 S0
75,0	70,0	5,6	9,7	\	HPWE 0750 0700 056-097 S0
80,0	75,0	5,6	9,7	\	HPWE 0800 0750 056-097 S0
85,0	80,0	9,7	12,8	15,0	HPWE 0850 0800 097-128-150 S0
90,0	85,0	9,7	12,8	15,0	HPWE 0900 0850 097-128-150 S0
95,0	90,0	9,7	12,8	15,0	HPWE 0950 0900 097-128-150 S0
100,0	95,0	9,7	12,8	15,0	HPWE 1000 0950 097-128-150 S0
105,0	100,0	9,7	12,8	15,0	HPWE 1050 1000 097-128-150 S0
110,0	105,0	9,7	12,8	15,0	HPWE 1100 1050 097-128-150 S0
115,0	110,0	9,7	12,8	15,0	HPWE 1150 1100 097-128-150 S0
120,0	115,0	9,7	12,8	15,0	HPWE 1200 1150 097-128-150 S0
125,0	120,0	9,7	12,8	15,0	HPWE 1250 1200 097-128-150 S0
130,0	125,0	9,7	12,8	15,0	HPWE 1300 1250 097-128-150 S0
135,0	130,0	9,7	12,8h	15,0	HPWE 1350 1300 097-128-150 S0
140,0	135,0	9,7	12,8	15,0	HPWE 1400 1350 097-128-150 S0
145,0	140,0	9,7	12,8	15,0	HPWE 1500 1400 097-128-150 S0
150,0	145,0	9,7	12,8	15,0	HPWE 1500 1450 097-128-150 S0
155,0	150,0	9,7	12,8	15,0	HPWE 1550 1500 097-128-150 S0

d_{f8}	D_{H9}	E +0.2	E +0.2	E +0.2	ART.NR. / ITEM
160,0	155,0	9,7	12,8	15,0	HPWE 1600 1550 097-128-150 S0
165,0	160,0	9,7	12,8	15,0	HPWE 1650 1600 097-128-150 S0
170,0	165,0	9,7	12,8	15,0	HPWE 1700 1650 097-128-150 S0
175,0	170,0	9,7	12,8	15,0	HPWE 1750 1700 097-128-150 S0
180,0	175,0	9,7	12,8	15,0	HPWE 1800 1750 097-128-150 S0
185,0	180,0	9,7	12,8	15,0	HPWE 1850 1800 097-128-150 S0
190,0	185,0	9,7	12,8	15,0	HPWE 1900 1850 097-128-150 S0
195,0	190,0	9,7	12,8	15,0	HPWE 1950 1900 097-128-150 S0
200,0	195,0	9,7	12,8	15,0	HPWE 2000 1950 097-128-150 S0
205,0	200,0	9,7	12,8	15,0	HPWE 2050 2000 097-128-150 S0
210,0	205,0	9,7	12,8	15,0	HPWE 2100 2050 097-128-150 S0
215,0	210,0	9,7	12,8	15,0	HPWE 2150 2100 097-128-150 S0
220,0	215,0	\	15	25,0	HPWE 2200 2150 150-250 S0
225,0	220,0	\	15	25,0	HPWE 2250 2200 150-250 S0
230,0	225,0	\	15	25,0	HPWE 2300 2250 150-250 S0
235,0	230,0	\	15	25,0	HPWE 2350 2300 150-250 S0
240,0	235,0	\	15	25,0	HPWE 2400 2350 150-250 S0
245,0	240,0	\	15	25,0	HPWE 2450 2400 150-250 S0
250,0	245,0	\	15,0	25,0	HPWE 2500 2450 150-250 S0
255,0	250,0	\	15,0	25,0	HPWE 2550 2500 150-250 S0

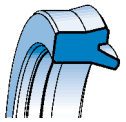

WSL

AVSTRYKARE TYP WSL

Beskrivning

Avstrykare typ WSL har en hög och flexibel tätningsläpp på den dynamiska sidan och en stark, kortare och utskjutande läpp på den statiska sidan. Den här speciella profilen håller kolvstången och den statiska sidan där avstrykaren sitter fria från föroreningar, skräp eller vatten. Föroreningar skulle skada tätningen och korrodera de inre delarna av cylindern.

Tekniska data

Hastighet:	<1 m/s
Temperatur:	från -35 °C till +100 °C med toppar upp till +110 °C
Vätskor:	vatten vid rumstemperatur, mineralolja (se tabell 1 på sida 12)

Material

Materialet är polyuretan med en hög elasticitetsfaktor, lågt sättningsvärde och hög slitstyrka.
Hårdheten är 93 Shore A±2.
Materialreferens: C0

Montage

Montage är enkelt eftersom det kan ske i halvöppna spår närmast på utsidan av cylindern.
Avlägsna grader och vassa kanter för undvika skador på avstrykaren under montage.
För mer information se installationsanvisningarna på sida 26.

WSL ROD WIPER

Description

The WSL wiper has a high flexible wiping lip on the dynamic side and a strong, shorter, protruding lip on the static side.
This special profile keeps the rod and the static side where it is housed free from any impurity, waste or water. Impurities would damage the seal and corrode the inner part of the cylinder.

Technical data

Speed:	*<1 m/s*
Temperature:	*from - 35 °C to + 100 °C with peaks till +110 °C*
Fluids:	*water at room temperature, mineral oils (see table 1, page 12)*

Material

The material used is a polyurethane with a high modulus of elasticity, low compression set and high wear resistance.
Its hardness is 93 Shore A ± 2.
Compound reference: C0

Assembly

It is not very problematic as it can be done in semi-open groove located in the nearest part outside the cylinder.
Remove cutting edges and flashes to avoid the scratching of the wiper during the installation.
For further information please refer to the installation instructions on page 26.

WSL

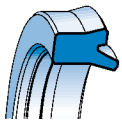

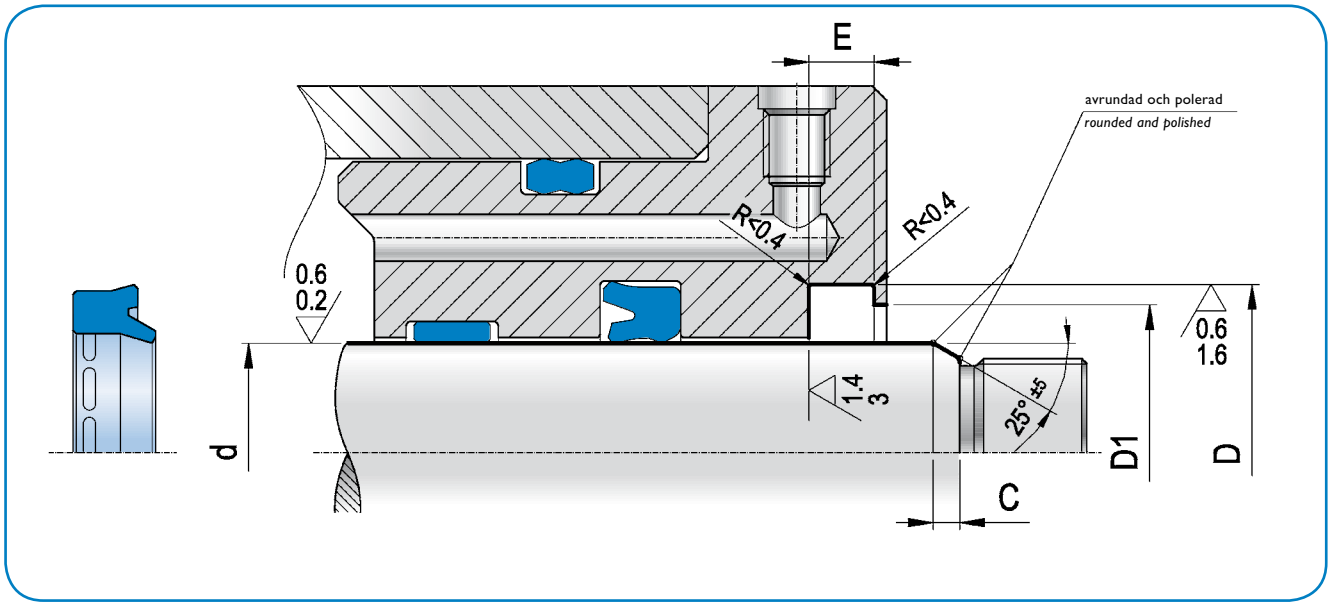

d_{h9}	D_{H10}	$E_{+0,2}$	$D_{1\ 0/+0,2}$	ART.NR. / *ITEM*
5,0	12,0	2,8	8,0	WSL 0050 0120 028 CO
6,0	12,0	3,0	9,0	WSL 0060 0120 030 CO
8,0	14,6	3,8	11,0	WSL 0080 0146 038 C0
10,0	15,0	1,0	13,0	WSL 0100 0150 010 CO
10,0	16,6	3,8	13,0	WSL 0100 0166 038 C0
12,0	18,6	3,8	15,0	WSL 0120 0186 038 C0
13,0	19,6	3,8	16,0	WSL 0130 0196 038 C0
14,0	20,6	3,8	17,0	WSL 0140 0206 038 C0
15,0	21,6	3,8	18,0	WSL 0150 0216 038 C0
16,0	22,6	3,8	19,0	WSL 0160 0226 038 C0
18,0	24,6	3,8	21,0	WSL 0180 0246 038 C0
20,0	28,6	5,3	23,0	WSL 0200 0286 053 C0
22,0	30,6	5,3	25,0	WSL 0220 0306 053 C0
24,0	32,6	5,3	27,0	WSL 0240 0326 053 C0
25,0	33,6	5,3	28,0	WSL 0250 0336 053 C0
28,0	36,6	5,3	31,0	WSL 0280 0366 053 C0
30,0	38,0	5,3	33,0	WSL 0300 0380 053 C0
30,0	38,6	5,3	33,0	WSL 0300 0386 053 C0
32,0	40,6	5,3	35,0	WSL 0320 0406 053 C0
35,0	43,6	5,3	38,0	WSL 0350 0436 053 C0
36,0	44,6	5,3	39,0	WSL 0360 0446 053 C0
38,0	46,6	5,3	41,0	WSL 0380 0466 053 C0
40,0	48,6	5,3	43,0	WSL 0400 0486 053 C0
45,0	53,6	5,3	48,0	WSL 0450 0536 053 C0
46,0	54,6	5,3	49,0	WSL 0460 0546 053 C0
50,0	58,0	5,3	53,0	WSL 0500 0580 053 C0
50,0	58,6	5,3	53,0	WSL 0500 0586 053 C0

d_{h9}	D_{H10}	$E_{+0,2}$	$D_{1\ 0/+0,2}$	ART.NR. / *ITEM*
55,0	63,6	5,3	58,0	WSL 0550 0636 053 C0
55,0	65,6	5,3	58,0	WSL 0550 0656 053 CO
56,0	64,6	5,3	59,0	WSL 0560 0646 053 C0
60,0	68,0	5,3	63,0	WSL 0600 0680 053 C0
60,0	68,6	5,3	63,0	WSL 0600 0686 053 C0
60,0	70,0	5,0	63,0	WSL 0600 0700 050 C0
61,0	69,6	5,3	64,0	WSL 0610 0696 053 C0
63,0	71,6	5,3	66,0	WSL 0630 0716 053 C0
65,0	73,6	5,3	68,0	WSL 0650 0736 053 C0
70,0	78,6	5,3	73,0	WSL 0700 0786 053 C0
70,0	80,0	5,0	73,0	WSL 0700 0800 050 C0
70,0	82,2	7,1	76,0	WSL 0700 0822 071 CO
70,0	82,6	7,1	76,0	WSL 0700 0826 071 CO
75,0	83,6	5,3	78,0	WSL 0750 0836 053 C0
75,0	87,2	7,1	81,0	WSL 0750 0872 071 C0
76,0	84,6	5,3	79,0	WSL 0760 0846 053 C0
80,0	88,6	5,3	83,0	WSL 0800 0886 053 C0
80,0	90,2	7,1	83,0	WSL 0800 0902 071 CO
80,0	92,6	7,1	83,0	WSL 0800 0926 071 CO
85,0	93,6	5,3	88,0	WSL 0850 0936 053 C0
85,0	97,2	7,1	91,0	WSL 0850 0972 071 C0
90,0	102,2	7,1	96,0	WSL 0900 1022 071 C0
91,0	99,6	5,3	94,0	WSL 0910 0996 053 C0
95,0	107,2	7,1	101,0	WSL 0950 1072 071 C0
100,0	108,6	5,3	103,0	WSL 1000 1086 053 CO
100,0	112,2	7,1	106,0	WSL 1000 1122 071 C0
105,0	113,6	5,3	108,0	WSL 1050 1136 053 CO

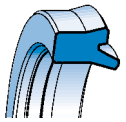

WSL

d_{h9}	D_{H10}	$E_{+0,2}$	$D_{1\ 0/+0,2}$	ART.NR. / *ITEM*
105,0	117,2	7,1	111,0	WSL 1050 1172 071 C0
107,0	115,6	5,3	110,0	WSL 1070 1156 053 C0
110,0	118,6	5,3	113,0	WSL 1100 1186 053 CO
110,0	122,2	7,1	116,0	WSL 1100 1222 071 C0
115,0	127,2	7,1	121,0	WSL 1150 1272 071 C0
120,0	132,2	7,1	126,0	WSL 1200 1322 071 C0
125,0	137,2	7,1	131,0	WSL 1250 1372 071 C0
126,0	134,6	5,3	129,0	WSL 1260 1346 053 C0
130,0	142,2	7,1	136,0	WSL 1300 1422 071 C0
135,0	147,2	7,1	141,0	WSL 1350 1472 071 C0
140,0	152,2	7,1	146,0	WSL 1400 1522 071 C0
140,0	155,0	9,0	146,5	WSL 1400 1550 090 C0
145,0	157,2	7,1	151,0	WSL 1450 1572 071 C0
150,0	162,2	7,1	156,0	WSL 1500 1622 071 C0
160,0	172,2	7,1	166,0	WSL 1600 1722 071 CO

d_{h9}	D_{H10}	$E_{+0,2}$	$D_{1\ 0/+0,2}$	ART.NR. / *ITEM*
160,0	175,2	10,1	168,0	WSL 1600 1752 101 C0
170,0	185,2	10,1	178,0	WSL 1700 1852 101 C0
180,0	195,2	10,1	188,0	WSL 1800 1952 101 C0
180,0	200,2	10,2	183,0	WSL 1800 2002 102 CO
190,0	205,2	10,1	198,0	WSL 1900 2052 101 C0
200,0	215,2	10,1	208,0	WSL 2000 2152 101 C0
210,0	225,2	10,1	218,0	WSL 2100 2252 101 C0
220,0	235,2	10,1	228,0	WSL 2200 2352 101 C0
230,0	245,2	10,1	238,0	WSL 2300 2452 101 C0
240,0	255,2	10,1	248,0	WSL 2400 2552 101 C0
250,0	265,2	10,1	258,0	WSL 2500 2652 101 C0

OBS: Kontakta vår tekniska avdelning för dimensioner som inte finns i katalogen.
Remark: please contact our technical dept. for further dimensions not included in the catalogue.

WSL

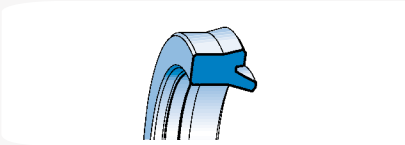

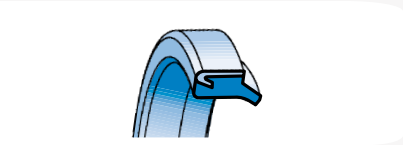

WSG

AVSTRYKARE MED STEG TYP WSG

Beskrivning

Avstrykare typ WSG rengör kolvstången och utestänger yttre föroreningar.
Den består av en metallkärna fäst vid ett polyuretanelement.
Spåret är öppet och tillåter en enklare formgivning av sätet.

Tekniska data

Hastighet:	<0,8 m/s
Temperatur:	från -35 °C till +100 °C med toppar upp till 110 °C.
Vätskor:	atmosfäriska faktorer, vatten vid temperaturer lägre än 60 °C, mineraloljor (se tabell 1 på sida 12)

Material

Materialet är polyuretan med en hårdhet av 93 Shore A och en stålkärna.
Materialreferens: CA

Montage

Montage sker i öppet spår.
Avlägsna grader och vassa kanter för undvika skador på avstrykaren under montage.

Varning: Avstrykarens hölje måste hålla sig inom de toleranser som visas i kolumn D.
Om så inte sker kan spaltextrusioner ske under drift.

WSG TYPE WIPER WITH STEP

Description

The function of the WSG wiper is to clean the rod while returning to position, blocking external impurities.
It is made up of a metal core bonded to a polyurethane element.
The groove is open and allows easier design of the seat.

Technical data

Speed:	*<0.8 m/s*
Temperature:	*from – 35 °C to + 100 °C with peaks till 110 °C.*
Fluids:	*atmospheric factors, water at a temperature below 60 °C, mineral oils (see table 1, page 12)*

Material

The material of the wiper is a polyurethane with a hardness of 93 Shore A and steel core.
Compound reference: CA

Assembly

The assembly is done in open groove.
Remove flashes and cutting edges to allow better installation of the wiper.

Warning: The housing of the wiper must be within the machining tolerance as shown in column D.
Not observed tolerances may cause the extrusion of the product during the operations.

WSG

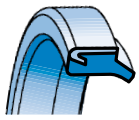

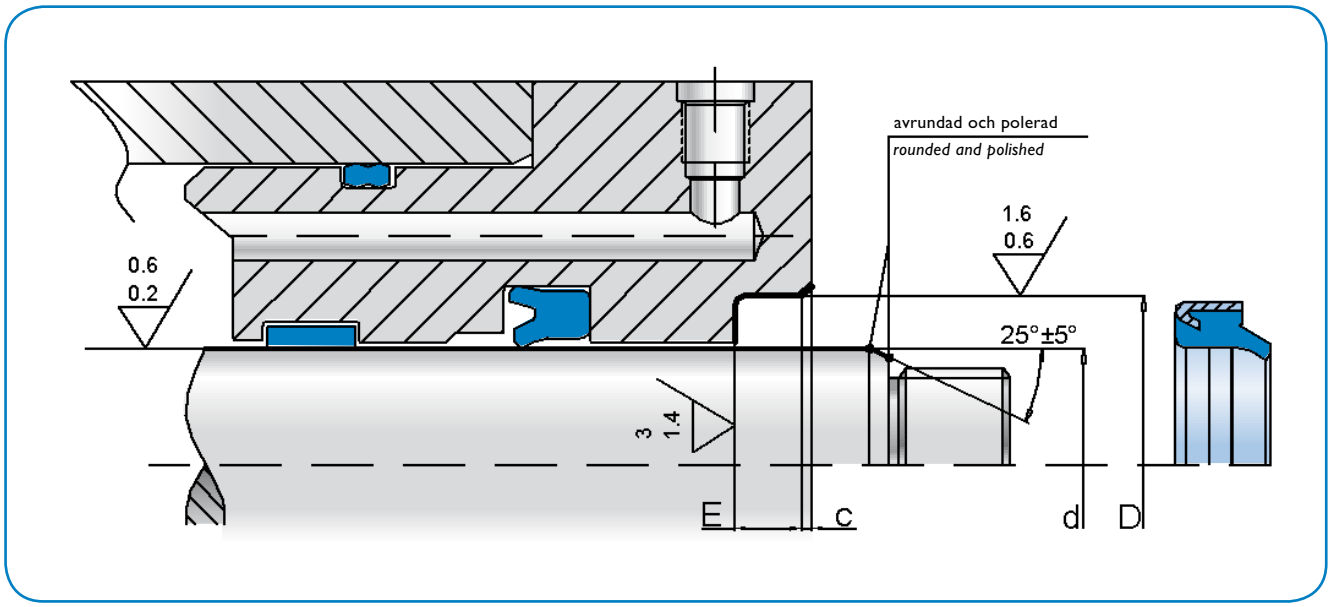

	d_{h9}	D_{H10}	Toll.	$E_{+0,2}$	C	ART.NR. / *ITEM*
	20,0	30,0	-0	4,0	0,8	WSG 0200 0300 040 CA
	20,0	30,0	+0,033	5,0	1,0	WSG 0200 0300 050 CA
*	20,0	30,0		7,0	1,5	WSG 0200 0300 070 CA
	22,0	30,0	-0	4,0	0,8	WSG 0220 0300 040 CA
	22,0	32,0	+0,039	5,0	1,0	WSG 0220 0320 050 CA
*	22,0	32,0		7,0	1,5	WSG 0220 0320 070 CA
	25,0	35,0	-0	5,0	1,5	WSG 0250 0350 050 CA
*	25,0	35,0	+0,039	7,0	1,5	WSG 0250 0350 070 CA
	28,0	38,0		5,0	1,0	WSG 0280 0350 050 CA
	28,0	38,0	-0	7,0	1,5	WSG 0280 0380 070 CA
	30,0	40,0	+0,039	5,0	1,0	WSG 0300 0400 050 CA
	30,0	40,0		7,0	1,5	WSG 0300 0400 070 CA
	32,0	42,0	-0	5,0	1,0	WSG 0320 0420 050 CA
	32,0	42,0	+0,039	7,0	1,5	WSG 0320 0420 070 CA
	35,0	45,0		5,0	1,0	WSG 0350 0450 050 CA
*	35,0	45,0	-0	7,0	1,5	WSG 0350 0450 070 CA
	36,0	46,0	+0,039	5,0	1,0	WSG 0360 0460 050 CA
	38,0	48,0		7,0	1,0	WSG 0380 0480 070 CA
	40,0	50,0	-0	5,0	1,0	WSG 0400 0500 050 CA
*	40,0	50,0	+0,046	7,0	1,5	WSG 0400 0500 070 CA
	42,0	52,0		7,0	1,5	WSG 0420 0520 070 CA

	d_{h9}	D_{H10}	Toll.	$E_{+0,2}$	C	ART.NR. / *ITEM*
	45,0	55,0	-0	7,0	1,5	WSG 0450 0550 070 CA
	50,0	60,0	+0,046	5,0	1,0	WSG 0500 0600 050 CA
*	50,0	60,0		7,0	1,5	WSG 0500 0600 070 CA
	55,0	65,0	-0	7,0	1,5	WSG 0550 0650 070 CA
*	56,0	66,0	+0,046	7,0	1,5	WSG 0560 0660 070 CA
	60,0	70,0		5,0	1,0	WSG 0600 0700 050 CA
	60,0	70,0	-0	7,0	1,5	WSG 0600 0700 070 CA
	65,0	75,0	0,046	7,0	1,5	WSG 0650 0750 070 CA
*	70,0	80,0		7,0	1,5	WSG 0700 0800 070 CA
	75,0	85,0	-0	7,0	1,5	WSG 0750 0850 070 CA
*	80,0	90,0	+0,054	7,0	1,5	WSG 0800 0900 070 CA
	85,0	95,0		7,0	1,5	WSG 0850 0950 070 CA
*	90,0	100,0	-0	7,0	1,5	WSG 0900 1000 070 CA
	95,0	105,0	+0,054	7,0	1,5	WSG 0950 1050 070 CA
	100,0	110,0		7,0	1,5	WSG 1000 1100 070 CA
	110,0	120,0	-0	7,0	1,5	WSG 1100 1200 070 CA
	120,0	130,0	+0,063	7,0	1,5	WSG 1200 1300 070 CA

* i enlighet med normen ISO 3320
– in accordance with ISO 3320 norms

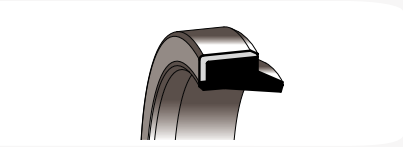

R09

AVSTRYKARE TYP R09

Beskrivning

Avstrykare typ R09 rengör kolvstången och utestänger yttre föroreningar.
Den består av en yttre slipad metallburskärna limmad mot ett NBR-element.
Spåret är öppet och tillåter en enklare formgivning av sätet.

Tekniska data

Hastighet:	<1 m/s
Temperatur:	-30 °C till +100 °C
Vätskor:	atmosfäriska faktorer, vatten, sand etc. (se tabell 1 på sida 12)

Material

Materialet är nitrilgummi NBR 90 Shore A med metallkärna AISI 1010.
Materialreferens: NG

Montage

Montage sker i öppet spår.
Avlägsna grader och vassa kanter för undvika skador på avstrykaren under montage.

Varning: Avstrykarens hölje måste hålla sig inom de toleranser som visas i kolumn D.
Om så inte sker kan spaltextrusioner ske under drift.

R09 TYPE WIPER

Description

The function of the R09 wiper is cleaning the rod while return into position, blocking external impurities.
It is made up of an external, grinded metal cage core part glued to a NBR element.
The groove is open and makes easier the design of the seat.

Technical data

Speed:	*<1 m/s*
Temperature:	*- 30 °C to +100 °C mescola NBR*
Fluids:	*atmospheric factors ,water, sand,etc. (see table 1, page 12)*

Material

The wiper material is a nitrile rubber NBR 90 Shore A with steel core AISI 1010.
Compound reference: NG

Assembly

The assembly is done in open groove.
Remove flashes and cutting edges to allow better installation of the wiper.

Warning: The housing of the wiper must be within the machining tolerance as shown in column D.
Not observed tolerances may cause the extrusion of the product during the operations.

R09

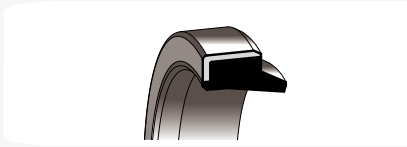

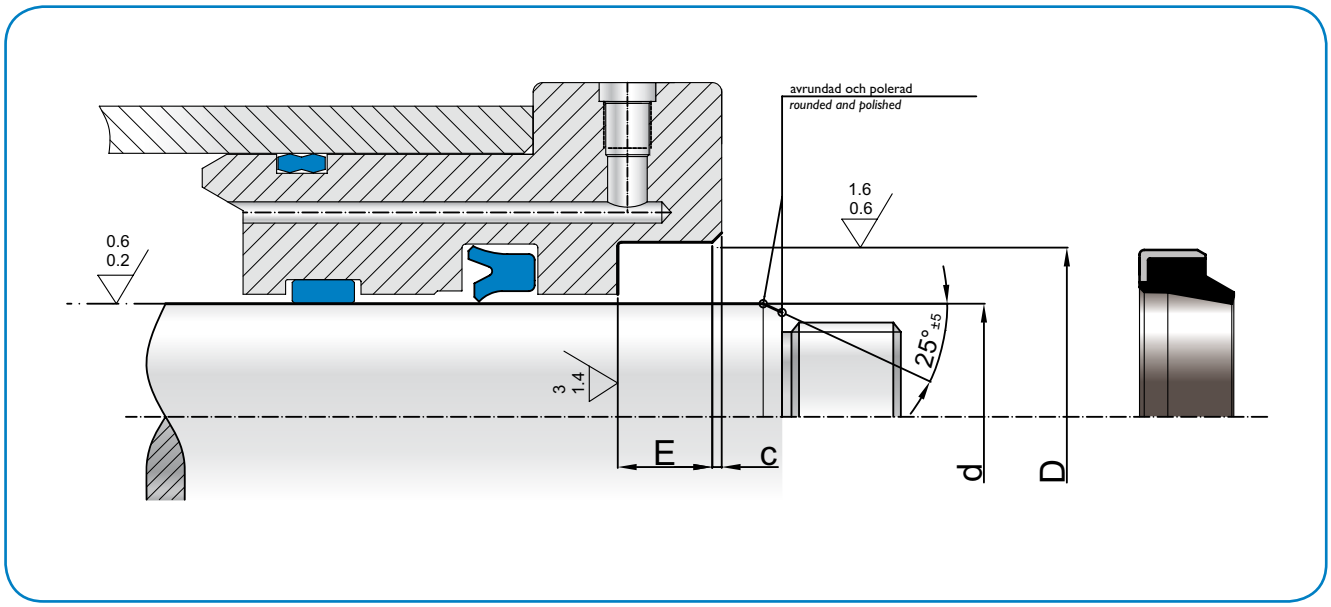

WSL
WSG
R09
WWS
WAT
TRD
WED
WEL

	d_{h9}	D_{H10}	Toll.	$E_{+0,2}$	C	ART.NR. / *ITEM*
	20,0	30,0	-0	4,0	0,8	R09 0200 0300 040 NG
	20,0	30,0	+0,033	5,0	1,0	R09 0200 0300 050 NG
*	20,0	30,0		7,0	1,5	R09 0200 0300 070 NG
	22,0	30,0	-0	4,0	0,8	R09 0220 0300 040 NG
	22,0	32,0	+0,039	5,0	1,0	R09 0220 0320 050 NG
*	22,0	32,0		7,0	1,5	R09 0220 0320 070 NG
	25,0	35,0	-0	5,0	1,5	R09 0250 0350 050 NG
*	25,0	35,0	+0,039	7,0	1,5	R09 0250 0350 070 NG
	28,0	38,0		5,0	1,0	R09 0280 0350 050 NG
	28,0	38,0	-0	7,0	1,5	R09 0280 0380 070 NG
	30,0	40,0	+0,039	5,0	1,0	R09 0300 0400 050 NG
	30,0	40,0		7,0	1,5	R09 0300 0400 070 NG
	32,0	42,0	-0	5,0	1,0	R09 0320 0420 050 NG
	32,0	42,0	+0,039	7,0	1,5	R09 0320 0420 070 NG
	35,0	45,0		5,0	1,0	R09 0350 0450 050 NG
*	35,0	45,0	-0	7,0	1,5	R09 0350 0450 070 NG
	36,0	46,0	+0,039	5,0	1,0	R09 0360 0460 050 NG
	38,0	48,0		7,0	1,0	R09 0380 0480 070 NG
	40,0	50,0	-0	5,0	1,0	R09 0400 0500 050 NG
*	40,0	50,0	+0,046	7,0	1,5	R09 0400 0500 070 NG
	42,0	52,0		7,0	1,5	R09 0420 0520 070 NG

	d_{h9}	D_{H10}	Toll.	$E_{+0,2}$	C	ART.NR. / *ITEM*
	45,0	55,0	-0	7,0	1,5	R09 0450 0550 070 NG
	50,0	60,0	+0,046	5,0	1,0	R09 0500 0600 050 NG
*	50,0	60,0		7,0	1,5	R09 0500 0600 070 NG
	55,0	65,0	-0	7,0	1,5	R09 0550 0650 070 NG
*	56,0	66,0	+0,046	7,0	1,5	R09 0560 0660 070 NG
	60,0	70,0		5,0	1,0	R09 0600 0700 050 NG
	60,0	70,0	-0	7,0	1,5	R09 0600 0700 070 NG
	65,0	75,0	0,046	7,0	1,5	R09 0650 0750 070 NG
*	70,0	80,0		7,0	1,5	R09 0700 0800 070 NG
	75,0	85,0	-0	7,0	1,5	R09 0750 0850 070 NG
*	80,0	90,0	+0,054	7,0	1,5	R09 0800 0900 070 NG
	85,0	95,0		7,0	1,5	R09 0850 0950 070 NG
*	90,0	100,0	-0	7,0	1,5	R09 0900 1000 070 NG
	95,0	105,0	+0,054	7,0	1,5	R09 0950 1050 070 NG
	100,0	110,0		7,0	1,5	R09 1000 1100 070 NG
	110,0	120,0	-0	7,0	1,5	R09 1100 1200 070 NG
	120,0	130,0	+0,063	7,0	1,5	R09 1200 1300 070 NG

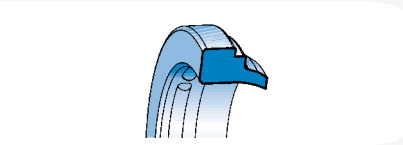

WWS

AVSTRYKARE MED STEG TYP WWS

Beskrivning

Avstrykare typ WWS har till skillnad från andra profiler, ett steg på den statiska sidan som hakar i höljet. Detta underlättar vid automatiserat montage och gör den mekaniska konstruktionen mycket enklare.
Den har urtag i avstrykarens inre bas vilket har en stabiliserande effekt och säkerställer god ventilation. Detta undviker problem med spaltextrusion.

Tekniska data

Hastighet:	<1 m/s
Temperatur:	från -35 °C till +100 °C med toppar upp till +110 °C
Vätskor:	vatten vid rumstemperatur, mineralolja (se tabell 1 på sida 12)

Material

Materialet är en mycket flexibel polyuretan, även vid låga temperaturer och med en hög slitstyrka.
Standardmaterial: polyuretan 90 Shore A upp till diameter 35 mm (B0).
För större diametrar: polyuretan 93 Shore A (C0).
Materialreferens för diametrar ≤35 mm: B0
Materialreferens för diametrar >35 mm: C0

Montage

Montaget är mycket enkelt eftersom det kan ske i ett halvöppet spår.
Avlägsna grader och vassa kanter i höljet.
För mer information se installationsanvisningarna på sida 26.

WWS WIPER TYPE WITH STEP

Description

The WWS scraper, unlike other profiles, has a step in the static side which hooks it to the housing.
This helps automated assembly and makes the mechanical construction of the groove extremely easy.
It presents notches in the wiper inner base having stabilisation effect, ensuring good ventilation.
This avoids extrusion problems.

Technical data

Speed:	*<1 m/s*
Temperature:	*from - 35 °C to + 100 °C with peaks till +110 °C*
Fluids:	*water at room temperature, mineral oils (see table 1, page 12)*

Material

The material used is a very flexible polyurethane, even at low temperatures, with a high abrasion resistance.
Standard polyurethane 90 Shore A up to diameter 35 mm (B0).
For bigger dimensions standard polyurethane 93 Shore A (C0).
Compound reference diam ≤≤35mm: B0
Compound reference diam > 36mm: C0

Assembly

The assembly is much easier since it can be done in semi-open groove.
Remove flashes an/or cutting edges in the housing.
For further information please refer to the installation instructions on page 26.

WWS

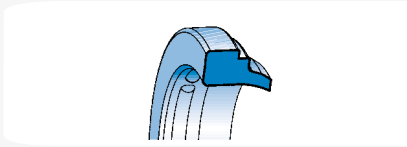

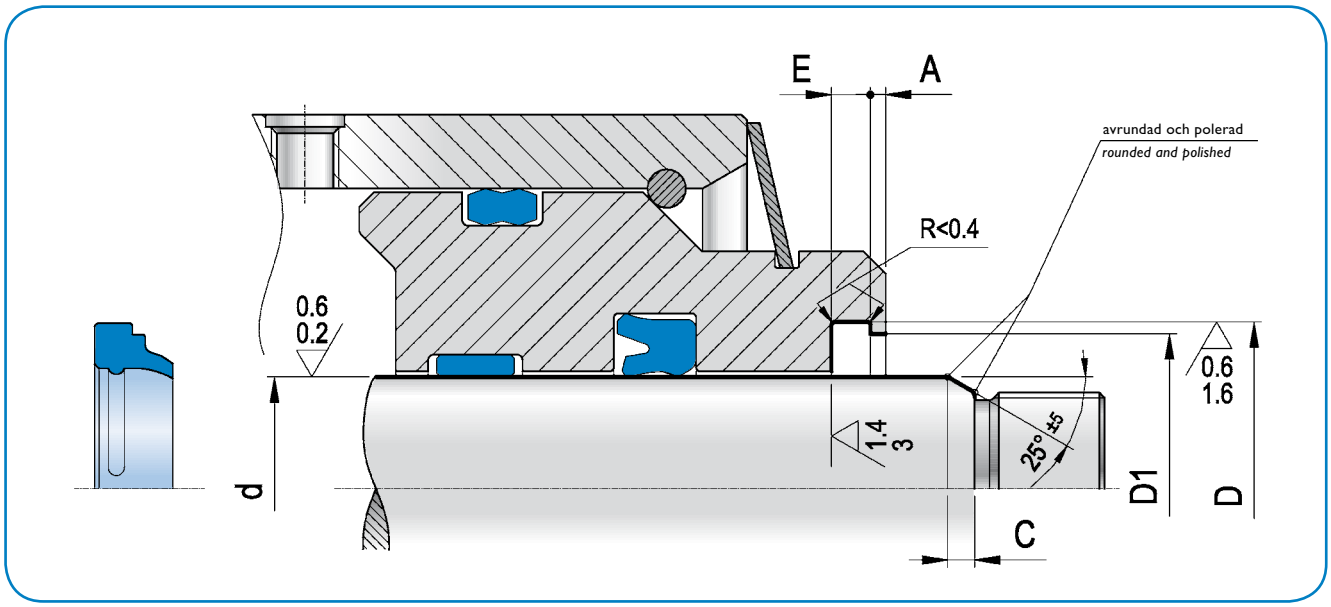

	d_{h9}	D_{H10}	$E_{+0,2}$	$D_{1\ H11}$	Amin.	ART.NR. / *ITEM*
*	6,0	10,0	2,0	9,0	1,0	WWS 0060 0100 020 B0
*	8,0	14,0	2,6	12,0	1,0	WWS 0080 0140 026 B0
*	10,0	16,0	2,6	14,0	1,0	WWS 0100 0160 026 B0
*	10,0	18,0	4,0	16,0	1,0	WWS 0100 0180 040 B0
*	12,0	18,0	2,6	16,0	1,0	WWS 0120 0180 026 B0
*	12,0	20,0	4,0	18,0	1,0	WWS 0120 0200 040 B0
*	14,0	20,0	2,6	18,0	1,0	WWS 0140 0200 026 B0
*	14,0	22,0	4,0	20,0	1,0	WWS 0140 0220 040 B0
	15,0	23,0	4,0	21,0	1,0	WWS 0150 0230 040 B0
*	16,0	24,0	4,0	22,0	1,0	WWS 0160 0240 040 B0
*	18,0	26,0	4,0	24,0	1,0	WWS 0180 0260 040 B0
*	20,0	28,0	4,0	26,0	1,0	WWS 0200 0280 040 B0
*	22,0	30,0	4,0	28,0	1,0	WWS 0220 0300 040 B0
	24,0	32,0	4,0	30,0	1,0	WWS 0240 0320 040 B0
*	25,0	33,0	4,0	31,0	1,0	WWS 0250 0330 040 B0
*	28,0	36,0	4,0	34,0	1,0	WWS 0280 0360 040 B0
	30,0	38,0	4,0	36,0	1,0	WWS 0300 0380 040 B0
*	32,0	40,0	4,0	38,0	1,0	WWS 0320 0400 040 B0
	34,0	42,0	4,0	40,0	1,0	WWS 0340 0420 040 B0
	35,0	43,0	4,0	41,0	1,0	WWS 0350 0430 040 B0
*	36,0	44,0	4,0	42,0	1,0	WWS 0360 0440 040 C0
	38,0	46,0	4,0	44,0	1,0	WWS 0380 0460 040 C0
*	40,0	48,0	4,0	46,0	1,0	WWS 0400 0480 040 C0
	42,0	50,0	4,0	48,0	1,0	WWS 0420 0500 040 C0

* i enlighet med normen ISO 3320
– in accordance with ISO 3320 norms

	d_{h9}	D_{H10}	$E_{+0,2}$	$D_{1\ H11}$	Amin.	ART.NR. / *ITEM*
*	45,0	53,0	4,0	51,0	1,0	WWS 0450 0530 040 C0
*	50,0	58,0	4,0	56,0	1,0	WWS 0500 0580 040 C0
	52,0	60,0	4,0	58,0	1,0	WWS 0520 0600 040 C0
	55,0	63,0	4,0	61,0	1,0	WWS 0550 0630 040 C0
*	56,0	64,0	4,0	62,0	1,0	WWS 0560 0640 040 C0
	60,0	68,0	4,0	66,0	1,0	WWS 0600 0680 040 C0
*	63,0	71,0	4,0	69,0	1,0	WWS 0630 0710 040 C0
	63,5	71,5	4,0	69,5	1,0	WWS 0635 0715 040
	65,0	73,0	4,0	71,0	1,0	WWS 0650 0730 040 C0
*	70,0	78,0	4,0	76,0	1,0	WWS 0700 0780 040 C0
	75,0	83,0	4,0	81,0	1,0	WWS 0750 0830 040 C0
*	80,0	88,0	4,0	86,0	1,0	WWS 0800 0880 040 C0
	85,0	93,0	4,0	91,0	1,0	WWS 0850 0930 040 C0
*	90,0	98,0	4,0	96,0	1,0	WWS 0900 0980 040 C0
*	100,0	108,0	4,0	106,0	1,0	WWS 1000 1080 040 C0
	110,0	122,0	5,5	119,0	1,5	WWS 1100 1220 055 C0
	120,0	132,0	5,5	129,0	1,5	WWS 1200 1320 055 C0
*	125,0	137,0	5,5	134,0	1,5	WWS 1250 1370 055 C0
*	140,0	152,0	5,5	149,0	1,5	WWS 1400 1520 055 C0
	150,0	162,0	5,5	159,0	1,5	WWS 1500 1620 055 C0
*	160,0	172,0	5,5	169,0	1,5	WWS 1600 1720 055 C0
*	180,0	192,0	5,5	189,0	1,5	WWS 1800 1920 055 C0

OBS: Kontakta vår tekniska avdelning för dimensioner som inte finns i katalogen.
Remark: please contact our technical dept. for further dimensions not included in the catalogue.

WAT

NO-TWISTING AVSTRYKARE TYP WAT

Beskrivning

Avstrykare typ WAT är självinriktande i fall av felinriktning av kolvstång, tack vare sin speciella profil och utformning.
Den har två tätningsläppar och liknar en tätning: den avstrykande tätningsläppen är längre, mycket flexibel och dynamisk; den statiska tätningsläppen är kortare och hindrar föroreningar från att fastna på det tätande steget.

Tekniska data

Hastighet:	<1 m/s
Temperatur:	från -35 °C till +100 °C med toppar upp till +110 °C
Vätskor:	vatten vid rumstemperatur, mineraloljor (se tabell 1 på sida 12)

Material

Materialet är en polyuretan typ C0 med hör elsticitetsfaktor, lågt sättningsvärde och med en hög slitstyrka.
Hårdheten är 93 Shore A±2.
Materialreferens: C0
Det är också möjligt att använda hårdare polyuretaner för starkt förorenade miljöer.

Montage

Montage är mycket enkelt tack vare ett halvöppet spår.
Avlägsna grader och vassa kanter i höljet.
För mer information se installationsanvisningarna på sida 26.

WAT NO-TWISTING TYPE WIPER

Description

The WAT wiper can be self-aligned in case of rod misalignment during operations, thanks to its special profile and design,.
It presents two lips and it's similar to a seal: the scraping lip is longer, very flexible and dynamic; the static lip is shorter and stops the impurity sticking to the blocking step.

Technical data

Speed:	*<1 m/s*
Temperature:	*from - 35 °C to + 100 °C with peaks till +110 °C*
Fluids:	*water at room temperature mineral oils (see table 1, page 12)*

Material

The proposed material is a "C0" type polyurethane, with high elasticity modulus, low compression-set and high abrasion resistance.
The hardness is 93 Shore A ± 2.
Compound reference: C0
It is also possible to use harder polyurethanes for heavy polluted environments.
In case please contact our technical department.

Assembly

The assembly is extremely easy because of the semi-open groove.
Remove flashes an/or cutting edges in the housing.
For further information please refer to the installation instructions on page 26.

WAT

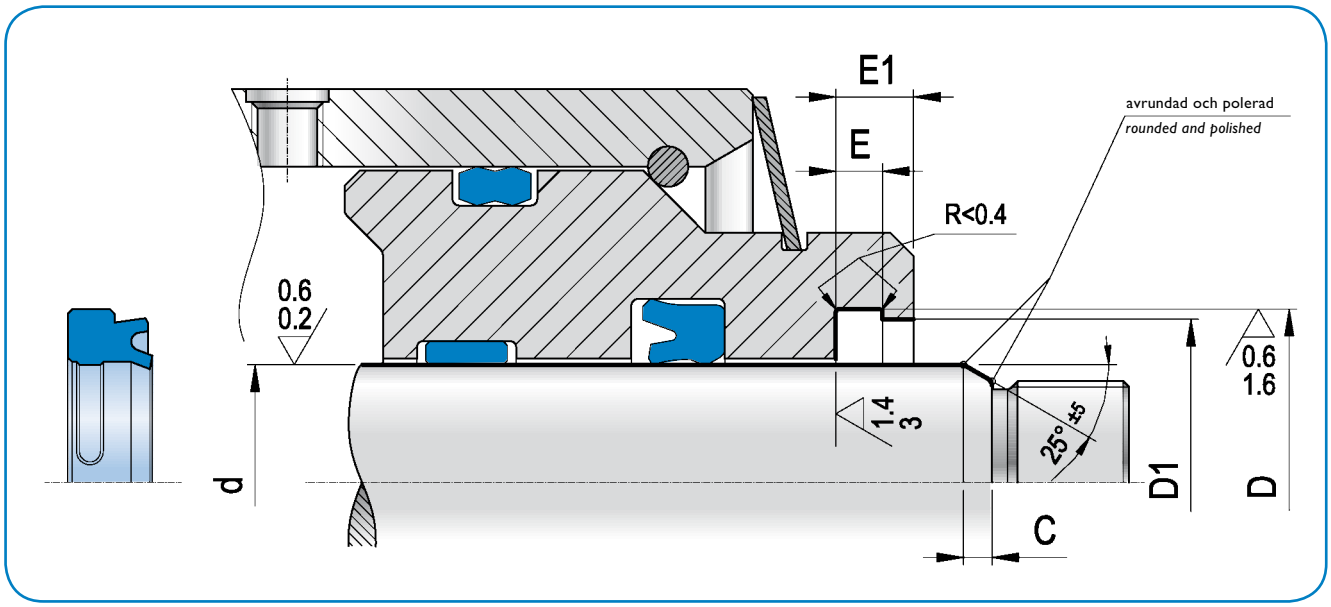

WSL
WSG
R09
WWS
WAT
TRD
WED
WEL

d_{h9}	D_{H10}	$D_{1\ H11}$	$E_{+0,2}$	$E_{1\ +0,2}$	ART.NR. / *ITEM*
16,0	24,0	21,5	5,0	7,0	WAT 0160 0240 050 C0
18,0	26,0	23,5	5,0	7,0	WAT 0180 0260 050 C0
20,0	28,0	25,5	5,0	7,0	WAT 0200 0280 050 C0
22,0	30,0	27,5	5,0	7,0	WAT 0220 0300 050 C0
25,0	33,0	30,5	5,0	7,0	WAT 0250 0330 050 C0
28,0	36,0	33,5	5,0	7,0	WAT 0280 0360 050 C0
32,0	40,0	37,5	5,0	7,0	WAT 0320 0400 050 C0
36,0	44,0	41,5	5,0	7,0	WAT 0360 0440 050 C0
40,0	48,0	45,5	5,0	7,0	WAT 0400 0480 050 C0
45,0	53,0	50,5	5,0	7,0	WAT 0450 0530 050 C0
50,0	58,0	55,5	5,0	7,0	WAT 0500 0580 050 C0
56,0	66,0	63,0	6,3	8,3	WAT 0560 0660 063 C0

d_{h9}	D_{H10}	$D_{1\ H11}$	$E_{+0,2}$	$E_{1\ +0,2}$	ART.NR. / *ITEM*
60,0	68,0	65,5	5,0	7,0	WAT 0600 0680 050 CO
63,0	73,0	70,0	6,3	8,3	WAT 0630 0730 063 C0
70,0	80,0	77,0	6,3	8,3	WAT 0700 0800 063 C0
80,0	90,0	87,0	6,3	8,3	WAT 0800 0900 063 C0
90,0	100,0	97,0	6,3	8,3	WAT 0900 1000 063 C0
100,0	115,0	110,0	9,5	12,0	WAT 1000 1150 095 C0
110,0	122,0	119,0	5,5	7,0	WAT 1100 1220 055 CO
110,0	125,0	120,0	9,5	12,0	WAT 1100 1250 095 CO
115,0	127,0	124,0	5,5	7,0	WAT 1150 1270 055 CO
120,0	132,0	129,0	5,5	7,0	WAT 1200 1320 055 CO
125,0	137,0	134,0	5,5	7,0	WAT 1250 1370 055 CO
125,0	140,0	135,0	9,5	12,0	WAT 1250 1400 095 CO

OBS: Kontakta vår tekniska avdelning för dimensioner som inte finns i katalogen.
Remark: please contact our technical dept. for further dimensions not included in the catalogue.

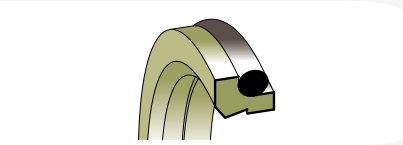

TRD

AVSTRYKARE TYP TRD

Beskrivning

Avstrykare typ TDR består av ett PTFE-element och en O-ring som har en tätande funktion i den statiska delen samtidigt som den har en förstärkande inverkan på avstrykaren i frånvaro av tryck. TRD har också en avstrykande effekt på utsidan av cylindern och upprätthåller en oljefilm på insidan av kolvstången. Vid användning med rätt tätning tillåter den en hydrodynamisk återgång i cylindern.

Tekniska data

Hastighet:	<15 m/s
Temperatur:	från -30 °C till +100 °C för standard O-Ring i nitrile. Med toppar upp till 120 °C. från -15 °C till +150 °C för O-ringar i FKM.

Material

Bronsfylld PTFE för standardtypen, och nitrilgummi NBR för O-ringen.
Materialreferens: TN

Montage

Enkelt montage i halvöppet spår.
O-ringen måste monteras i spåret först och sedan PTFE-elementet. Avlägsna grader och skapa kanter i spåret.

TRD TYPE WIPER RING

Description

The TDR wipers are made of a PTFE element and an O-Ring having a sealing effect in the static part and, at the same time has an energizing effect on wiper in the absence of pressure.
The TRD also has a scraping effect on the outside of the Cylinder and maintains a residual oil film on the internal part of the rod.
Used with proper sealing, allows the hydrodynamic return in the cylinder.

Technical data

Speed:	*<15 m/s*
Temperature:	*from - 30 °C to + 100 °C for the standard type with nitrile O-Ring.* *Short peaks till +120 °C* *from -15 °C to +150 °C with FKM O-rings*

Material

Bronze-filled PTFE for the standard type, and nitrile rubber NBR for the O-Ring.
Compound reference: TN

Assembly

Easy assembly in semi-open groove.
The O-Rings have to be fitted first into the groove and Then the PTFE element. Remove flashes and/or cutting edges in the groove.

TRD

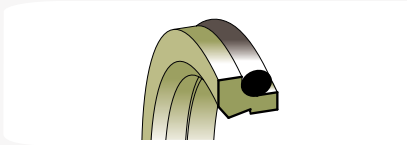

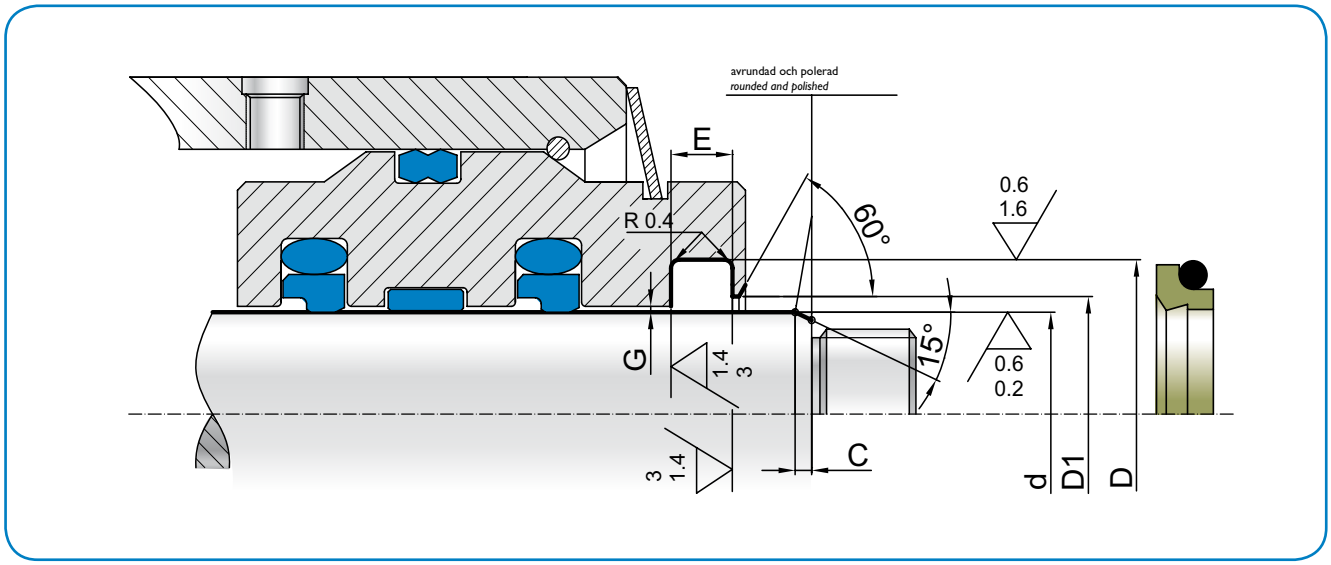

d_{f8}	D_{H9}	$E_{+0,2}$	O-Ring	C	D3	ART.NR. / ITEM
4,0	8,8	3,7	009	5,0	5,5	TRD 0040 0088 037 TN
5,0	9,8	3,7	010	5,0	6,5	TRD 0050 0980 037 TN
7,0	11,8	3,7	011	5,0	8,5	TRD 0070 011 037 TN
8,0	12,8	3,7	012	5,0	9,5	TRD 0080 0128 037 TN
10,0	14,8	3,7	013	5,0	11,5	TRD 0100 0148 037 TN
12,0	18,8	5,0	113	5,0	13,5	TRD 0120 0188 050 TN
14,0	20,8	5,0	114	5,0	15,5	TRD 0140 0208 050 TN
15,0	21,8	5,0	115	5,0	16,5	TRD 0150 0218 050 TN
16,0	22,8	5,0	116	5,0	17,5	TRD 0160 0228 050 TN
18,0	24,8	5,0	117	5,0	19,5	TRD 0180 0248 050 TN
20,0	26,8	5,0	118	5,0	21,5	TRD 0200 0268 050 TN
24,0	30,8	5,0	120	5,0	25,5	TRD 0240 0308 050 TN
25,0	31,8	5,0	121	5,0	26,5	TRD 0250 0318 050 TN
26,0	32,8	5,0	122	5,0	27,5	TRD 0260 0328 050 TN
28,0	34,8	5,0	123	5,0	29,5	TRD 0280 0348 050 TN
30,0	36,8	5,0	124	5,0	31,5	TRD 0300 0368 050 TN
32,0	38,8	5,0	126	5,0	33,5	TRD 0320 0388 050 TN
35,0	41,8	5,0	127	5,0	36,5	TRD 0350 0418 050 TN
37,0	43,8	5,0	129	5,0	38,5	TRD 0370 0438 050 TN
38,0	44,8	5,0	130	5,0	39,5	TRD 0380 0448 050 TN
40,0	46,8	5,0	131	5,0	41,5	TRD 0400 0468 050 TN
42,0	48,8	5,0	132	5,0	43,5	TRD 0420 0488 050 TN
45,0	51,8	5,0	134	5,0	46,5	TRD 0450 0518 050 TN
48,0	54,8	5,0	136	5,0	49,5	TRD 0480 0548 050 TN
50,0	56,8	5,0	137	5,0	51,5	TRD 0500 0568 050 TN
52,0	58,8	5,0	138	5,0	53,5	TRD 0520 0588 050 TN
55,0	61,8	5,0	140	5,0	56,5	TRD 0550 0618 050 TN
58,0	64,8	5,0	142	5,0	59,5	TRD 0580 0648 050 TN
60,0	66,8	5,0	143	5,0	61,5	TRD 0600 0668 050 TN
65,0	73,8	6,0	231	5,0	66,5	TRD 0650 0738 060 TN

d_{f8}	D_{H9}	$E_{+0,2}$	O-Ring	C	D3	ART.NR. / ITEM
70,0	78,8	6,0	233	5,0	71,5	TRD 0700 0788 060 TN
75,0	83,8	6,0	234	5,0	76,5	TRD 0750 0838 060 TN
80,0	88,8	6,0	236	5,0	81,5	TRD 0800 0888 060 TN
85,0	93,8	6,0	237	5,0	86,5	TRD 0850 0938 060 TN
90,0	98,8	6,0	239	5,0	91,5	TRD 0900 0988 060 TN
95,0	103,8	6,0	241	7,0	96,5	TRD 0950 1038 060 TN
100,0	108,8	6,0	242	7,0	101,5	TRD 1000 1088 060 TN
110,0	118,8	6,0	245	7,0	111,5	TRD 1100 1188 060 TN
120,0	128,8	6,0	249	7,0	121,5	TRD 1200 1288 060 TN
125,0	133,8	6,0	250	7,0	125,5	TRD 1250 1338 060 TN
130,0	138,8	6,0	252	7,0	131,5	TRD 1300 1388 060 TN
135,0	143,8	6,0	254	7,0	136,5	1350 1438 060 TN
140,0	148,8	6,0	255	7,0	141,5	TRD 1400 1488 060 TN
150,0	158,8	6,0	258	7,0	151,5	TRD 1500 1588 060 TN
155,0	163,8	6,0	259	7,0	156,5	TRD 1550 1638 060 TN
160,0	168,8	6,0	260	7,0	161,5	TRD 1600 1688 060 TN
170,0	178,8	6,0	261	7,0	171,5	TRD 1700 1788 060 TN
175,0	183,8	6,0	262	7,0	176,5	TRD 1750 1838 060 TN
180,0	188,8	6,0	263	7,0	181,5	TRD 1800 1888 060 TN
185,0	193,8	6,0	263	7,0	186,5	TRD 1850 1938 060 TN
190,0	198,8	6,0	264	7,0	191,5	TRD 1900 1988 060 TN
195,0	203,8	6,0	265	7,0	196,5	TRD 1950 2038 060 TN
200,0	208,8	6,0	266	10,0	201,5	TRD 2000 2088 060 TN
210,0	218,8	6,0	267	10,0	211,5	TRD 2100 2188 060 TN
220,0	228,8	6,0	269	10,0	221,5	TRD 2200 2288 060 TN
225,0	233,8	6,0	270	10,0	226,5	TRD 2250 2338 060 TN
230,0	238,8	6,0	271	10,0	231,5	TRD 2300 2388 060 TN
240,0	248,8	6,0	272	10,0	241,5	TRD 2400 2488 060 TN
250,0	258,8	6,0	274	10,0	251,5	TRD 2500 2588 060 TN
260,0	272,2	8,4	378	10,0	262,0	TRD 2600 2722 084 TN

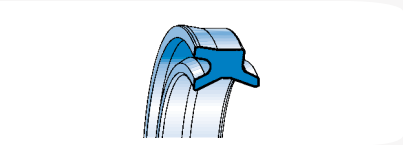

WED

DUBBELVERKANDE AVSTRYKARE TYP WED

Beskrivning

Den dubbelverkande avstrykaren typ WED har en kombinerad avstrykande profil där tätning tillhandahålles med en avstrykande tätningsläpp på utsidan och en tätande tätningsläpp på insidan.
Dimensionerna är utbytbara med normala avstrykarhöljen.
Den avstrykande tätningsläppen är mycket flexibel och kompenserar för felinriktning av kolvstången. Den tätande sidan har en starkare och längre tätningsläpp för att säkerställa tätningsfunktionen och för att hjälpa till att oljefilmen stannar på kolvstången vid återgång i cylindern.

Tekniska data

Tryck:	<20 bar
Hastighet:	1 m/s
Temperatur:	från -35 °C till +100 °C med toppar upp till +110 °C
Vätskor:	vatten vid rumstemperatur och mineraloljor (se tabell 1 på sida 12)

Material

Materialet är en polyuretan typ C0 med hög elsticitetsfaktor, lågt sättningsvärde och med en hög slitstyrka.
Hårdheten är 93 Shore A±2.
Det är också möjligt att använda hårdare polyuretaner för starkt förorenade miljöer.
Kontakta i så fall vår tekniska avdelning.
Materialreferens: C0

Montage

Montage är mycket enkelt tack vare ett halvöppet spår.
Avlägsna grader och vassa kanter i höljet.
För mer information se installationsanvisningarna på sida 26.

WED TYPE DOUBLE ACTING WIPER

Description

The WED bidirectional scraper has a combined scraper profile where the seal is provided with a scraping lip on the outside and a sealing lip on the inside.
The dimensions are interchangeable with normal scraper housings.
The scraping lip is very flexible and it compensate misalignments of the rod. The sealing side has a stronger and longer lip to ensure the sealing performance and to help the oil film remaining on the rod to go back into the cylinder.

Technical data

Pressure:	*<20 bar*
Speed:	*1 m/s*
Temperature:	*from - 35 °C to +100 °C with peaks till +110 °C*
Fluids:	*water at room temperature and mineral oils (see table 1, page 12)*

Material

The proposed material is a "C0" type polyurethane, with high elasticity modulus, low compression-set and high abrasion resistance.
The hardness is 93 Shore A ± 2.
Compound reference: C0
It is also possible to use harder polyurethanes for heavy polluted environments.
In case please contact our technical department.

Assembly

The assembly is extremely easy because of the semi-open groove.
Remove flashes an/or cutting edges in the housing.
For further information please refer to the installation instructions on page 26.

WED

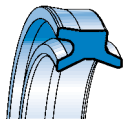

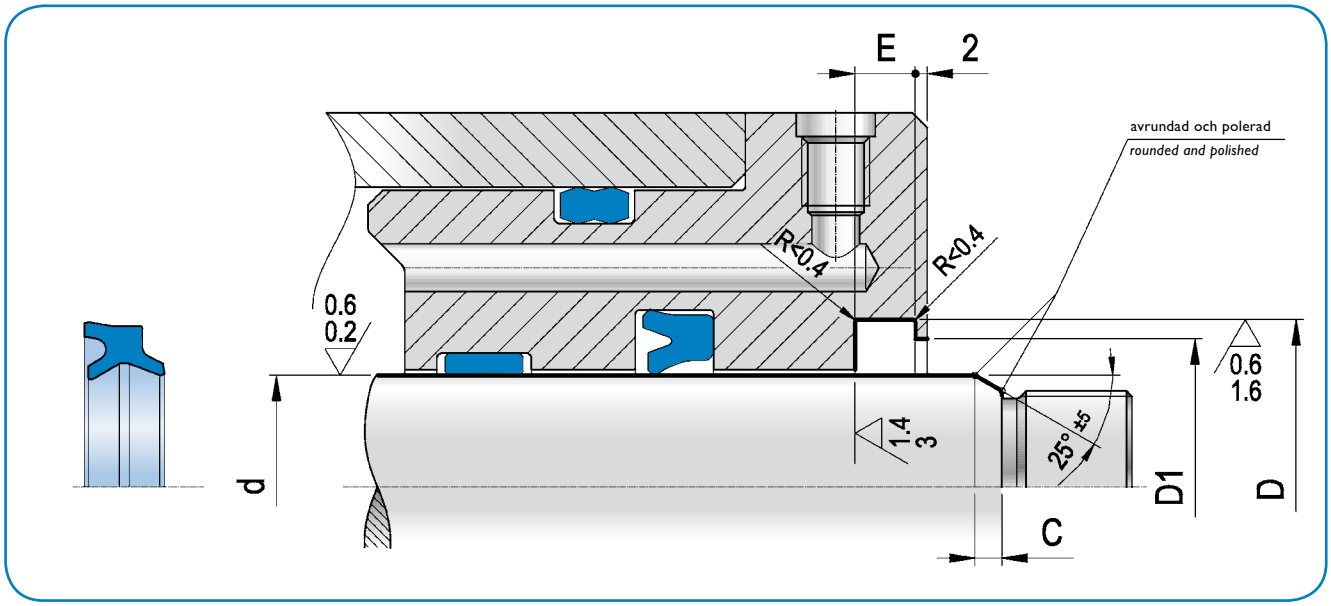

	d_{h9}	D_{H10}	$E_{+0,2}$	$D_{1\ 0/+0,2}$	C	ART.NR. / *ITEM*
	6,0	11,0	3,5	8,5	>3,5	WED 0060 0110 035 CO
	8,0	13,0	3,5	10,5	>3,5	WED 0080 0130 035 CO
	10,0	16,0	4,0	13,0	>3,5	WED 0100 0160 040 CO
*	12,0	18,0	4,0	14,5	> 3,5	WED 0120 0180 040 C0
	12,0	18,6	3,8	15,0	> 3,5	WED 0120 0186 038 C0
*	14,0	20,0	4,0	16,5	> 3,5	WED 0140 0200 040 C0
	14,0	20,6	3,8	17,0	> 3,5	WED 0140 0206 038 C0
	16,0	22,0	4,0	18,5	> 3,5	WED 0160 0220 040 C0
*	18,0	24,0	4,0	20,5	> 3,5	WED 0180 0240 040 C0
	18,0	24,6	3,8	21,0	> 3,5	WED 0180 0246 038 C0
	20,0	26,0	4,0	22,5	> 3,5	WED 0200 0260 040 C0
	20,0	28,6	5,3	23,0	> 3,5	WED 0200 0286 053 C0
*	22,0	28,0	4,0	24,5	> 3,5	WED 0220 0280 040 C0
	22,0	30,6	5,3	25,0	> 3,5	WED 0220 0306 053 C0
	24,0	32,6	5,3	27,0	> 3,5	WED 0240 0326 053 C0
	25,0	31,0	4,0	27,5	> 3,5	WED 0250 0310 040 C0
	25,0	33,6	5,3	28,0	> 3,5	WED 0250 0336 053 C0
*	28,0	36,0	5,0	31,0	> 3,5	WED 0280 0360 050 C0
	28,0	36,6	5,3	31,0	> 3,5	WED 0280 0366 053 C0
	30,0	38,0	5,0	33,0	> 3,5	WED 0300 0380 050 C0
	30,0	38,6	5,3	33,0	> 3,5	WED 0300 0386 053 C0
	32,0	40,0	5,0	35,0	> 3,5	WED 0320 0400 050 C0
	32,0	40,6	5,3	35,0	> 3,5	WED 0320 0406 053 C0
	35,0	43,0	5,0	38,0	> 3,5	WED 0350 0430 050 C0
	35,0	43,6	5,3	38,0	> 3,5	WED 0350 0436 053 C0
	35,0	45,0	5,0	38,0	> 4,0	WED 0350 0450 050 CO
*	36,0	44,0	5,0	39,0	> 3,5	WED 0360 0440 050 C0

	d_{h9}	D_{H10}	$E_{+0,2}$	$D_{1\ 0/+0,2}$	C	ART.NR. / *ITEM*
	36,0	44,6	5,3	39,0	> 3,5	WED 0360 0446 053 C0
	38,0	46,0	5,0	41,0	> 3,5	WED 0380 0460 050 CO
	40,0	48,0	5,0	43,0	> 4,0	WED 0400 0480 050 C0
	40,0	48,6	5,3	43,0	> 4,0	WED 0400 0486 053 C0
	42,0	50,0	5,0	45,0	> 3,5	WED 0420 0500 050 CO
	42,0	50,0	6,0	45,0	> 3,5	WED 0420 0500 060 CO
*	45,0	53,0	5,0	48,0	> 4,0	WED 0450 0530 050 C0
	45,0	53,6	5,3	48,0	> 4,0	WED 0450 0536 053 C0
	50,0	58,0	5,0	53,0	> 4,0	WED 0500 0580 050 C0
	50,0	58,6	5,3	53,0	> 4,0	WED 0500 0586 053 C0
	50,0	60,0	6,0	53,0	> 4,0	WED 0500 0600 060 CO
	55,0	63,6	5,3	58,0	> 4,0	WED 0550 0636 053 C0
	55,0	65,0	6,0	58,0	> 4,0	WED 0550 0650 060 C0
	56,0	64,6	5,3	59,0	> 4,0	WED 0560 0646 053 C0
*	56,0	66,0	6,0	59,0	> 4,0	WED 0560 0660 060 C0
	58,0	68,0	6,0	61,0	> 4,0	WED 0580 0680 060 C0
	60,0	68,6	5,3	63,0	> 4,0	WED 0600 0686 053 C0
	60,0	70,0	6,0	63,0	> 4,0	WED 0600 0700 060 C0
	63,0	71,6	5,3	66,0	> 4,0	WED 0630 0716 053 C0
	63,0	73,0	6,0	66,0	> 4,0	WED 0630 0730 060 C0
	65,0	73,6	5,3	68,0	> 4,0	WED 0650 0736 053 C0
	65,0	75,0	6,0	68,0	> 4,0	WED 0650 0750 060 C0
	67,0	77,0	6,0	70,0	> 4,0	WED 0670 0770 060 CO
	70,0	78,6	5,3	73,0	> 4,0	WED 0700 0786 053 C0
*	70,0	80,0	6,0	73,0	> 4,0	WED 0700 0800 060 C0
	75,0	83,6	5,3	78,0	> 4,0	WED 0750 0836 053 C0
	75,0	85,0	6,0	78,0	> 4,0	WED 0750 0850 060 C0

* i enlighet med normen ISO 6195
– in accordance with ISO 6195 norm

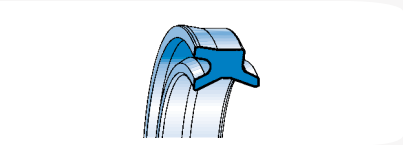

WED

	d_{h9}	D_{H10}	$E_{+0,2}$	$D_{1\ 0/+0,2}$	C	ART.NR. / *ITEM*
	78,0	88,0	6,0	81,0	> 4,0	WED 0780 0880 060 C0
	80,0	88,6	5,3	83,0	> 4,0	WED 0800 0886 053 C0
	80,0	90,0	6,0	83,0	> 4,0	WED 0800 0900 060 C0
	85,0	93,6	5,3	88,0	> 3,5	WED 0850 0936 053 CO
	85,0	95,0	6,0	88,0	> 4,0	WED 0850 0950 060 C0
	85,0	97,2	7,1	91,0	> 4,0	WED 0850 0972 071 C0
*	90,0	100,0	6,0	93,0	> 4,0	WED 0900 1000 060 C0
	90,0	102,2	7,1	96,0	> 4,0	WED 0900 1022 071 C0
	100,0	110,0	6,0	103,0	> 5,0	WED 1000 1100 060 C0

	d_{h9}	D_{H10}	$E_{+0,2}$	$D_{1\ 0/+0,2}$	C	ART.NR. / *ITEM*
	100,0	112,2	7,1	106,0	> 5,0	WED 1000 1122 071 C0
	110,0	122,2	7,1	116,6	> 5,0	WED 1100 1222 071 C0
*	110,0	125,0	8,5	114,0	> 5,0	WED 1100 1250 085 C0
	120,0	135,0	8,5	124,0	> 5,0	WED 1200 1350 085 C0
	125,0	140,0	8,5	129,0	> 5,0	WED 1250 1400 085 C0
*	140,0	155,0	8,5	144,0	> 5,0	WED 1400 1550 085 C0
	150,0	165,0	8,5	154,0	> 5,0	WED 1500 1650 085 C0
	160,0	175,0	8,5	164,0	> 5,0	WED 1600 1750 085 C0
	180,0	195,0	8,5	184,0	> 5,0	WED 1800 1950 085 C0

* i enlighet med normen ISO 6195
– in accordance with ISO 6195 norm

OBS: Kontakta vår tekniska avdelning för dimensioner som inte finns i katalogen.
Remark: please contact our technical dept. for further dimensions not included in the catalogue.

WED

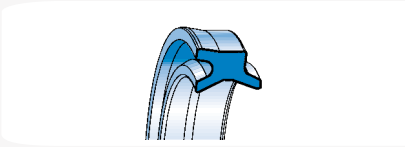

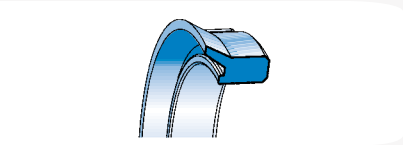

WEL

YTTRE AVSTRYKARE TYP WEL

Beskrivning

Avstrykare typ WEL används vanligtvis i enkelverkande cylindrar öppna på ena sidan.
På grund av sin rengörande funktion, används en avstrykare med inverterad profil för att förebygga slitage av cylinderdiametern som kan orsakas av atmosfäriska ämnen, kondensation och andra miljöfaktorer.

Tekniska data

Tryck:	inget tryck men en viss kavitation kan uppstå.
Hastighet:	<1 m/s
Temperatur:	från -35 °C till +100 °C, med toppar upp till +110 °C
Vätskor:	vatten, damm eller andra atmosfäriska faktorer (se tabell 1 på sida 12)

Material

Materialet är en polyuretan typ C0 med hög elsticitetsfaktor, lågt sättningsvärde och med en hög slitstyrka.
Hårdheten är 93 Shore A±2.
Materialreferens: C0

Montage

Montage sker med överlappning i halvöppet spår med avfasning som förebygger spaltextrusion av avstrykare under vändningsfasen. Det är viktigt att avlägsna grader och skapa kanter för att undvika skador.

WEL TYPE EXTERNAL WIPER

Description

The WEL wiper type is commonly used in simple effect cylinders open on one side.
Because of its cleaning function, a reverse profile wiper is used to prevent bore wearing which may be caused by atmospheric agents, condensation and other environmental conditions.

Technical data

Pressure:	*no pressure, but a slight cavitation might occur.*
Speed:	*<1 m/s*
Temperature:	*from - 35 °C to + 100 °C, with peaks till +110 °C*
Fluids:	*water, dust or other atmospheric factors (see table 1, page 12)*

Material

The proposed material is a "C0" type polyurethane, with high elasticity modulus, low compression-set and high abrasion resistance.
The hardness is 93 Shore A ± 2.
Compound reference: C0

Assembly

The assembly is done by overlapping in semi-open groove with a chamfer preventing the wiper extrusion during the cycle inversion. It is important to remove flashes or cutting edges to avoid damages.

WEL

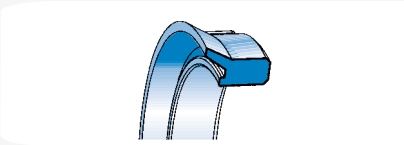

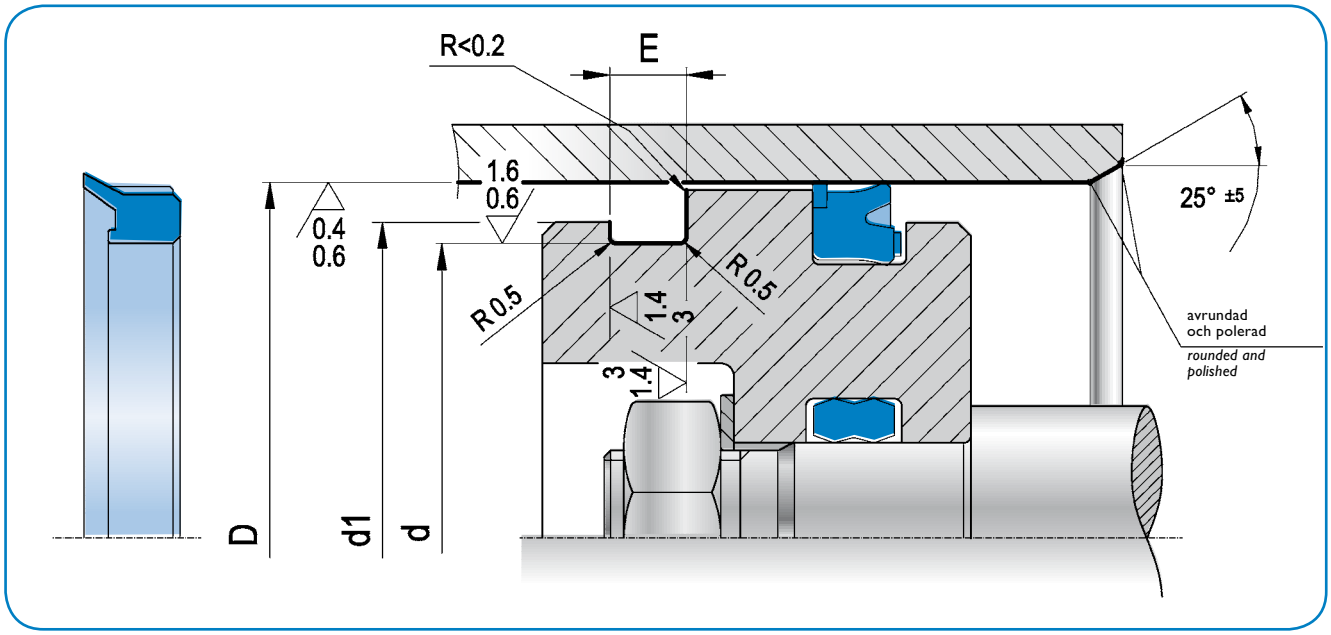

D_{H9}	d_{h9}	E +0,2	d_1	ART.NR. / *ITEM*
40,0	31,4	5,3	37,0	WEL 0400 0314 053 C0
45,0	36,4	5,3	42,0	WEL 0450 0364 053 C0
50,0	41,4	5,3	47,0	WEL 0500 0414 053 C0
60,0	51,4	5,3	57,0	WEL 0600 0514 053 C0
63,0	54,4	5,3	60,0	WEL 0630 0544 053 C0
70,0	61,4	5,3	67,0	WEL 0700 0614 053 C0
75,0	66,4	5,3	72,0	WEL 0750 0664 053 C0
80,0	71,4	5,3	77,0	WEL 0800 0714 053 C0
90,0	81,4	5,3	87,0	WEL 0900 0814 053 C0

D_{H9}	d_{h9}	E +0,2	d_1	ART.NR. / *ITEM*
95,0	86,4	5,3	92,0	WEL 0950 0864 053 C0
100,0	91,4	5,3	97,0	WEL 1000 0914 053 C0
110,0	101,4	5,3	107,0	WEL 1100 1014 053 C0
120,0	111,4	5,3	117,0	WEL 1200 1114 053 C0
140,0	131,4	5,3	137,0	WEL 1400 1314 053 C0

OBS: Kontakta vår tekniska avdelning för dimensioner som inte finns i katalogen.
Remark: please contact our technical dept. for further dimensions not included in the catalogue.

KLINGER Sweden

KLINGER Sweden AB
Kontovägen 3 » SE-175 62 JÄRFÄLLA
T +46 10 199 87 00 » F +46 8 739 21 30
info@klinger.se

www.klinger.se